Centre of Building Construction Engineering, Joint Stock Company
Pražská 16/810
102 00 Prague
Czech Republic
Tel.: +420 281 017 111
Fax: +420 271 751 128
kucera@csias.cz, www.csias.cz

Designated according to Article 29 of Regulation (EU) No 305/2011

Member of EOTA
www.eota.eu

Annex D for ETA 07/0017 of 14/03/2017

General Part

Technical Assessment Body issuing the ETA: Centre of Building Construction Engineering, Joint Stock Company	
Trade name of the construction product	RD Rýmařov s.r.o. Timber frame building kits
Product family to which the construction product belongs	Product area: 34 Building kits, units, and prefabricated elements
Manufacturer	RD Rýmařov s.r.o. 8. května 1191/45 795 01 Rýmařov Czech Republic www.rdrymarov.cz
Manufacturing plant(s)	RD Rýmařov s.r.o. 8. května 1191/45 795 01 Rýmařov Czech Republic
This Annex D contains	171 pages

Annex D - Technical documentation (separate document)

List of drawings

Num.	Name of construction	Type	Marking
1	**External wall**		
1.1	**Front, back wall**		
1.1.1	Horizontal sectional view - th. 225	Front, back wall	RD C 001
1.1.2	Vertical sectional view - th. 225	Front, back wall	RD C 002
1.1.3	View of the frame - th. 225/265/297	Front, back wall	RD C 003
1.1.4	View of the sheathing - th. 225/265/297	Front, back wall	RD C 004
1.1.5	Fixation of the sheathing on the frame - th. 225/265/297	Front, back wall	RD C 005
1.1.6	Horizontal sectional view - th. 265	Front, back wall	RD C 006
1.1.7	Vertical sectional view - th. 265	Front, back wall	RD C 007
1.1.8	Horizontal sectional view - th. 297	Front, back wall	RD C 008
1.1.9	Vertical sectional view - th. 297	Front, back wall	RD C 009
1.2	**Gable wall**		
1.2.1	Horizontal sectional view - th. 225	Gable wall	RD C 011
1.2.2	Vertical sectional view - th. 225	Gable wall	RD C 012
1.2.3	View of the frame - th. 225/265/297	Gable wall	RD C 013
1.2.4	View of the sheathing - th. 225/265/297	Gable wall	RD C 014
1.2.5	Fixation of the sheathing on the frame - th. 225/265/297	Gable wall	RD C 015
1.2.6	Horizontal sectional view - th. 265	Gable wall	RD C 016
1.2.7	Vertical sectional view - th. 265	Gable wall	RD C 017
1.2.8	Horizontal sectional view - th. 297	Gable wall	RD C 018
1.2.9	Vertical sectional view - th. 297	Gable wall	RD C 019
1.3	**External wall attic**		
1.3.1	Horizontal sectional view - th. 225	External wall attic	RD C 021
1.3.2	Vertical sectional view - th. 225	External wall attic	RD C 022
1.3.3	View of the frame - th. 225/265	External wall attic	RD C 023
1.3.4	View of the sheathing - th. 225/265	External wall attic	RD C 024
1.3.5	Fixation of the sheathing on the frame - th. 225/265	External wall attic	RD C 025
1.3.6	Horizontal sectional view - th. 265	External wall attic	RD C 026
1.3.7	Vertical sectional view - th. 265	External wall attic	RD C 027
1.3.8	Horizontal sectional view - th. 297	External wall attic	RD C 028
1.3.9	Vertical sectional view - th. 297	External wall attic	RD C 029
1.4	**Gable**		
1.4.1	Horizontal sectional view - th. 225	Gable	RD C 031
1.4.2	Vertical sectional view - th. 225	Gable	RD C 032
1.4.3	View of the frame - th. 225/265/297	Gable	RD C 033
1.4.4	View of the sheathing - th. 225/265/297	Gable	RD C 034
1.4.5	Fixation of the sheathing on the frame - th. 225/265/297	Gable	RD C 035
1.4.6	Horizontal sectional view - th. 265	Gable	RD C 036
1.4.7	Vertical sectional view - th. 265	Gable	RD C 037
1.4.8	Horizontal sectional view - th. 297	Gable	RD C 038
1.4.9	Vertical sectional view - th. 297	Gable	RD C 039
1.5	**Details**		
1.5.1	Corner connection - th. 225	Front/back wall and gable wall	RD C 040
1.5.2	Horizontal connection - th. 225	Front, back wall and gable wall	RD C 041
1.5.3	Anchoring on the groundwork	Front, back wall and gable wall	RD C 042
1.5.4	Connection with the ceiling element	Front, back wall	RD C 043
1.5.5	Vertical sectional view of the parapet		RD C 044
1.5.6	Vertical sectional view of the window head		RD C 045
1.5.7	Horizontal sectional view of the window lining		RD C 046
1.5.8	Connection with the ceiling element	Gable wall	RD C 047
1.5.9	Connection with the ceiling element	External wall attic	RD C 048
1.5.10	Connection with the ceiling inclination	External wall attic	RD C 049
1.5.11	Connection with the ceiling element	Gable	RD C 050
1.5.12	Corner connection - th. 265	Front/back wall and gable wall	RD C 060
1.5.13	Horizontal connection - th. 265	Front, back wall and gable wall	RD C 061
1.5.14	Anchoring on the groundwork	Front, back wall and gable wall	RD C 062
1.5.15	Connection with the ceiling element	Front, back wall	RD C 063
1.5.16	Vertical sectional view of the parapet		RD C 064
1.5.17	Vertical sectional view of the window head		RD C 065
1.5.18	Horizontal sectional view of the window lining		RD C 066
1.5.19	Connection with the ceiling element	Gable wall	RD C 067
1.5.20	Connection with the ceiling element	External wall attic	RD C 068
1.5.21	Connection with the ceiling inclination	External wall attic	RD C 069
1.5.22	Connection with the ceiling element	Gable	RD C 070
1.5.23	Connection with the ceiling attic element	Gable	RD C 071

1.5.24	Angular connection - th. 265	Front, back wall	RD C 072
1.5.25	Corner connection - th. 297	Front/back wall and gable wall	RD C 080
1.5.26	Horizontal connection - th. 297	Front, back wall and gable wall	RD C 081
1.5.25	Anchoring on the groundwork	Front, back wall and gable wall	RD C 082
1.5.26	Connection with the ceiling element	Front, back wall	RD C 083
1.5.27	Vertical sectional view of the parapet		RD C 084
1.5.28	Vertical sectional view of the window head		RD C 085
1.5.29	Horizontal sectional view of the window living		RD C 086
1.5.30	Connection with the ceiling element	Gable wall	RD C 087
1.5.31	Connection with the ceiling element	External wall attic	RD C 088
1.5.32	Connection with the ceiling inclination	External wall attic	RD C 089
1.5.33	Connection with the ceiling element	Gable	RD C 090
1.5.34	Connection with the ceiling attic element	Gable	RD C 091
1.5.37	Angular connection - th. 297	Front, back wall	RD C 092
2	**Interior wall, dividing wall**		
2.1	**Interior bearing wall**		
2.1.1	Horizontal sectional view - th. 170	Interior bearing wall	RD C 101
2.1.2	Vertical sectional view - th. 170	Interior bearing wall	RD C 102
2.1.3	View of the frame - th. 170	Interior bearing wall	RD C 103
2.1.4	View of the sheathing - th. 170	Interior bearing wall	RD C 104
2.1.5	Fixation of the sheathing on the frame - th. 170	Interior bearing wall	RD C 105
2.2	**Details**		
2.2.1	Connection with the external wall	Interior bearing wall	RD C 110
2.2.2	Horizontal connection - th. 170	Interior bearing wall	RD C 111
2.2.3	Connection with the ceiling element	Interior bearing wall	RD C 112
2.2.4	Connection with the external wall	Interior bearing wall	RD C 113
2.2.5	Connection with the external wall	Interior bearing wall	RD C 114
2.3	**Interior unbearing wall th. 170**		
2.3.1	Horizontal sectional view	Interior unbearing wall th. 170	RD C 201
2.3.2	Vertical sectional view	Interior unbearing wall th. 170	RD C 202
2.3.3	View of the frame	Interior unbearing wall th. 170	RD C 203
2.3.4	View of the sheathing	Interior unbearing wall th. 170	RD C 204
2.3.5	Fixation of the sheathing on the frame	Interior unbearing wall th. 170	RD C 205
2.4	**Dividing wall ground floor th. 110**		
2.4.1	Horizontal sectional view	Dividing wall ground floor th. 110	RD C 211
2.4.2	Vertical sectional view	Dividing wall ground floor th. 110	RD C 212
2.4.3	View of the frame	Dividing wall ground floor th. 110	RD C 213
2.4.4	View of the sheathing	Dividing wall ground floor th. 110	RD C 214
2.4.5	Fixation of the sheathing on the frame	Dividing wall ground floor th. 110	RD C 215
2.5	**Dividing wall ground floor th. 85 installation - Rw**		
2.5.1	Horizontal sectional view	Dividing wall ground floor th. 85 installation - Rw	RD C 221
2.5.2	Vertical sectional view	Dividing wall ground floor th. 85 installation - Rw	RD C 222
2.5.3	View of the frame	Dividing wall ground floor th. 85 installation - Rw	RD C 223
2.5.4	View of the sheathing	Dividing wall ground floor th. 85 installation - Rw	RD C 224
2.5.5	Fixation of the sheathing on the frame	Dividing wall ground floor th. 85 installation - Rw	RD C 225
2.6	**Dividing wall ground floor th. 145 installation - Rw**		
2.6.1	Horizontal sectional view	Dividing wall ground floor th. 145 installation - Rw	RD C 231
2.6.2	Vertical sectional view	Dividing wall ground floor th. 145 installation - Rw	RD C 232
2.6.3	View of the frame	Dividing wall ground floor th. 145 installation - Rw	RD C 233
2.6.4	View of the sheathing	Dividing wall ground floor th. 145 installation - Rw	RD C 234
2.6.5	Fixation of the sheathing on the frame	Dividing wall ground floor th. 145 installation - Rw	RD C 235
2.7	**Dividing wall attic th. 170/150**		
2.7.1	Horizontal sectional view	Dividing wall attic th. 170	RD C 241
2.7.2	Vertical sectional view	Dividing wall attic th. 170	RD C 242
2.7.3	View of the frame	Dividing wall attic th. 170	RD C 243
2.7.4	View of the sheathing	Dividing wall attic th. 170	RD C 244
2.7.5	Fixation of the sheathing on the frame	Dividing wall attic th. 170	RD C 245
2.8	**Dividing wall attic th. 110**		
2.8.1	Horizontal sectional view	Dividing wall attic th. 110	RD C 251
2.8.2	Vertical sectional view	Dividing wall attic th. 110	RD C 252
2.8.3	View of the frame	Dividing wall attic th. 110	RD C 253
2.8.4	View of the sheathing	Dividing wall attic th. 110	RD C 254
2.8.5	Fixation of the sheathing on the frame	Dividing wall attic th. 110	RD C 255

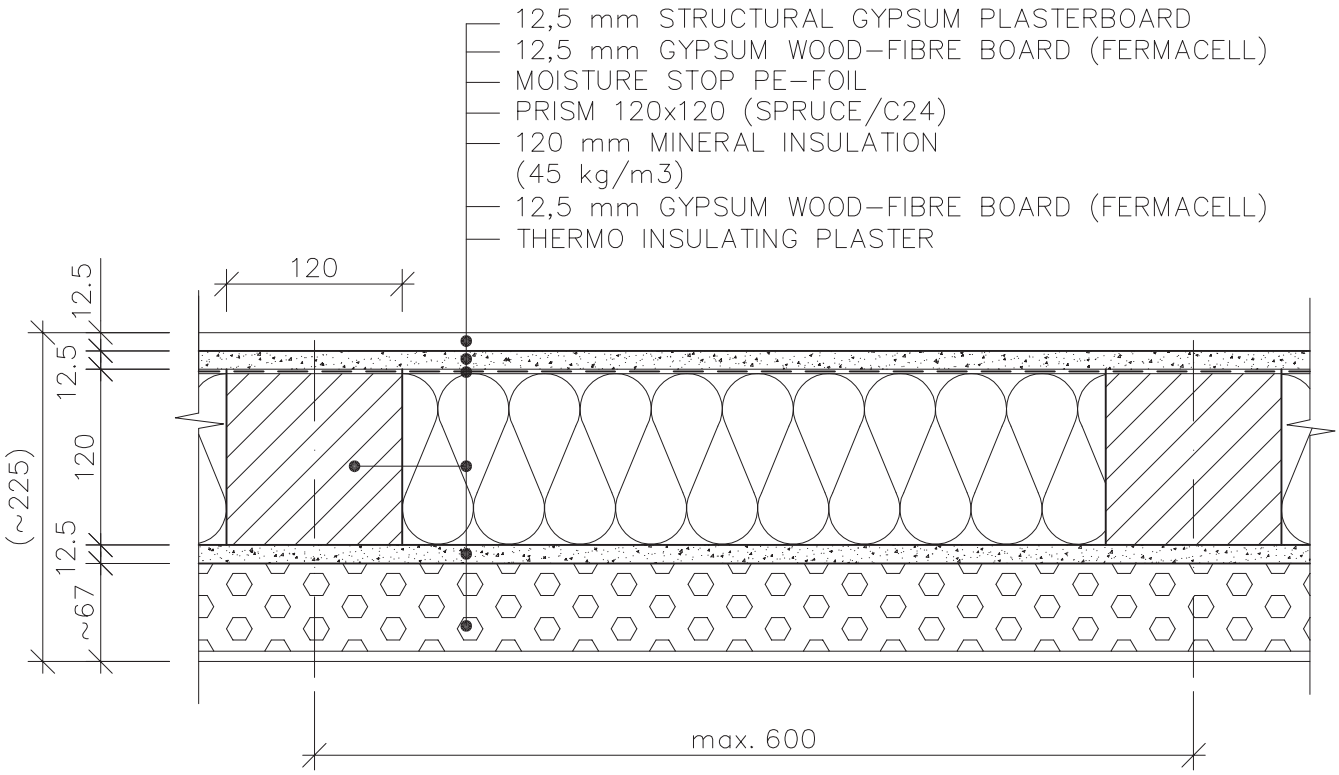

Scale applies to original 1:5	Remark: DETACHED HOUSE		Date				
	Worked out by:	Kohoutek Petr	01/06	Alternation	Date	Signature	Index x x x x x
	Authorized by:						
	Type: FRONT, BACK WALL						
RD RÝMAŘOV	HORIZONTAL SECTIONAL VIEW – TH. 225				RD C 001		

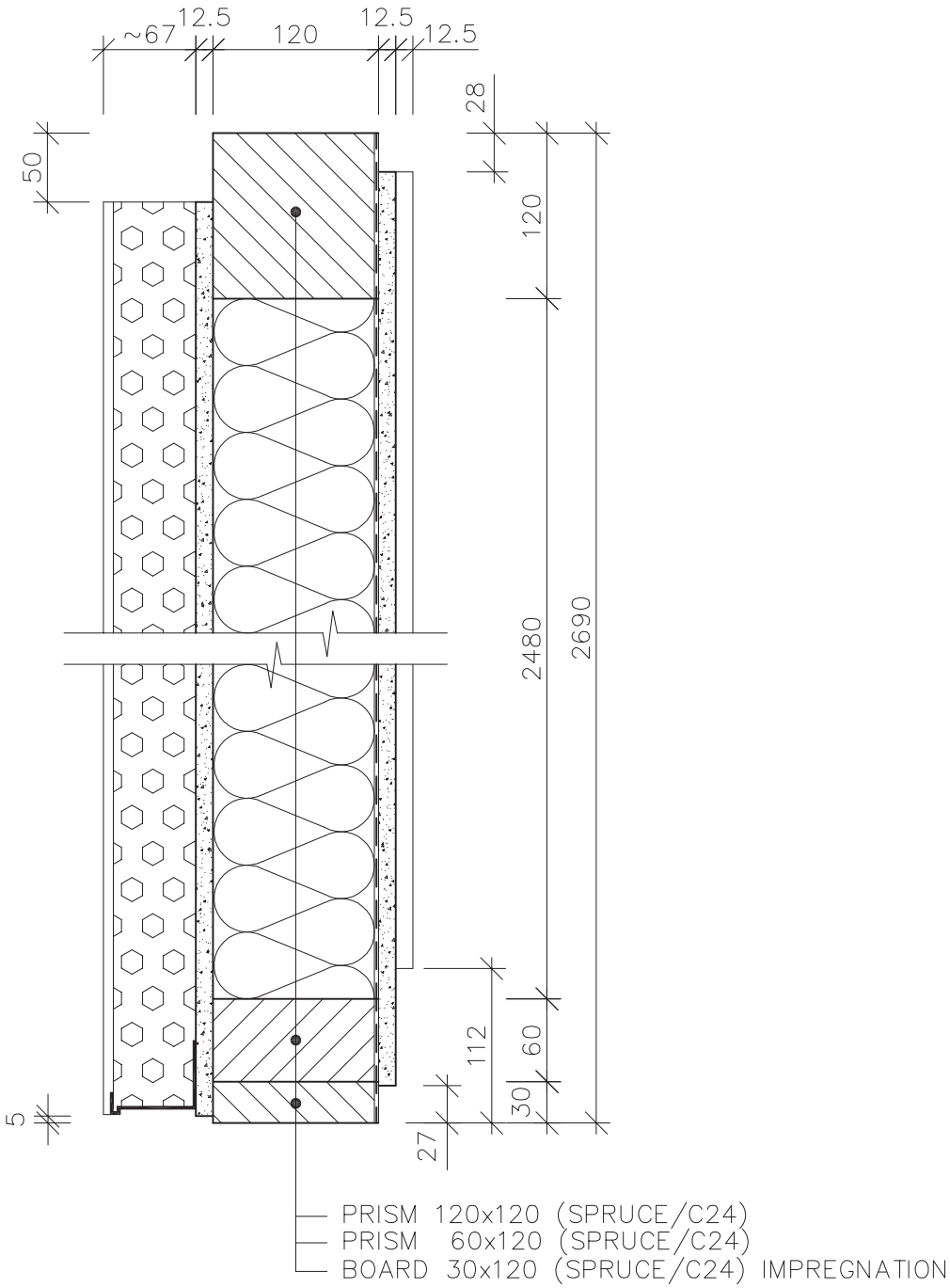

Scale applies to original 1:5	Remark: DETACHED HOUSE		Date				
	Worked out by:	Kohoutek Petr	01/06	Alternation	Date	Signature	Index
	Authorized by:						x x x x x
RD RÝMAŘOV	Type: FRONT, BACK WALL						
	VERTICAL SECTIONAL VIEW – TH. 225						RD C 002

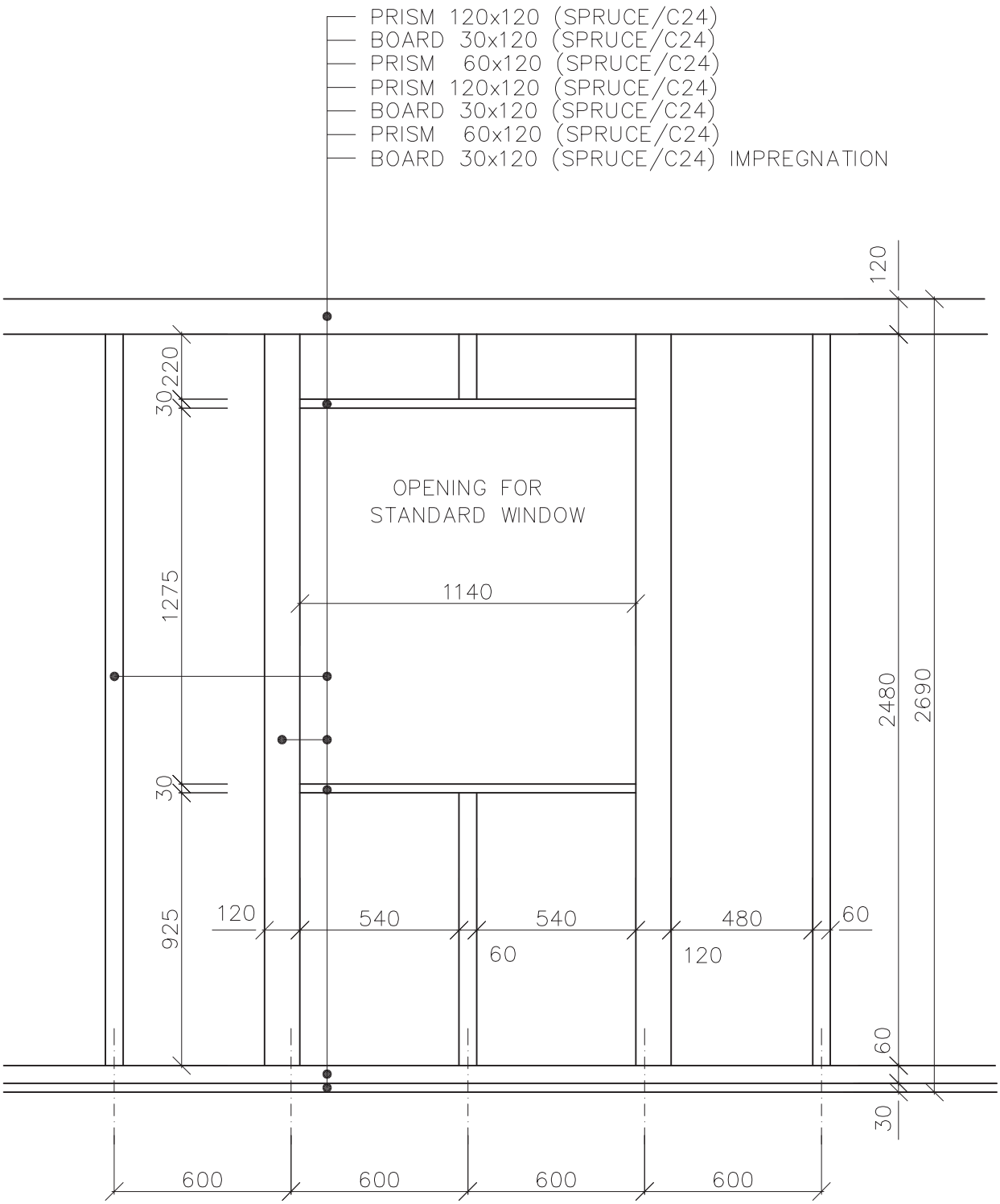

Scale applies to original 1:20	Remark: DETACHED HOUSE		Date				
	Worked out by:	Kohoutek Petr	01/06	Alternation	Date	Signature	Index x x x x x
	Authorized by:						
	Type: FRONT, BACK WALL						
RD RÝMAŘOV	VIEW OF THE FRAME – TH. 225/265/297				RD C 003		

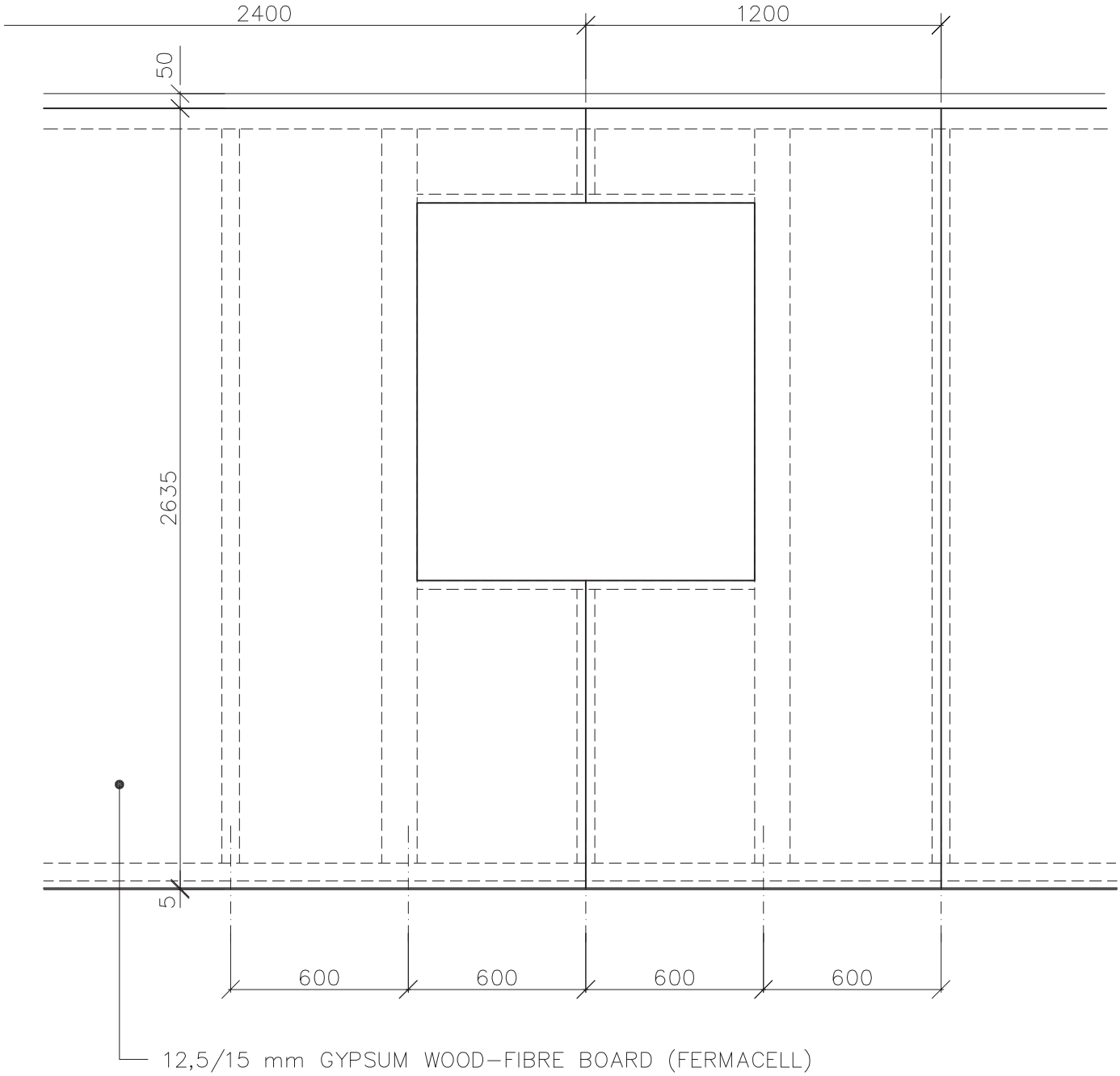

Scale applies to original 1:20	Remark: DETACHED HOUSE		Date			
	Worked out by:	Kohoutek Petr	01/06	Alternation	Date	Signature	Index
	Authorized by:						
	Type: FRONT, BACK WALL					
RD RÝMAŘOV	VIEW OF THE SHEATHING – TH. 225/265/297				RD C 004	

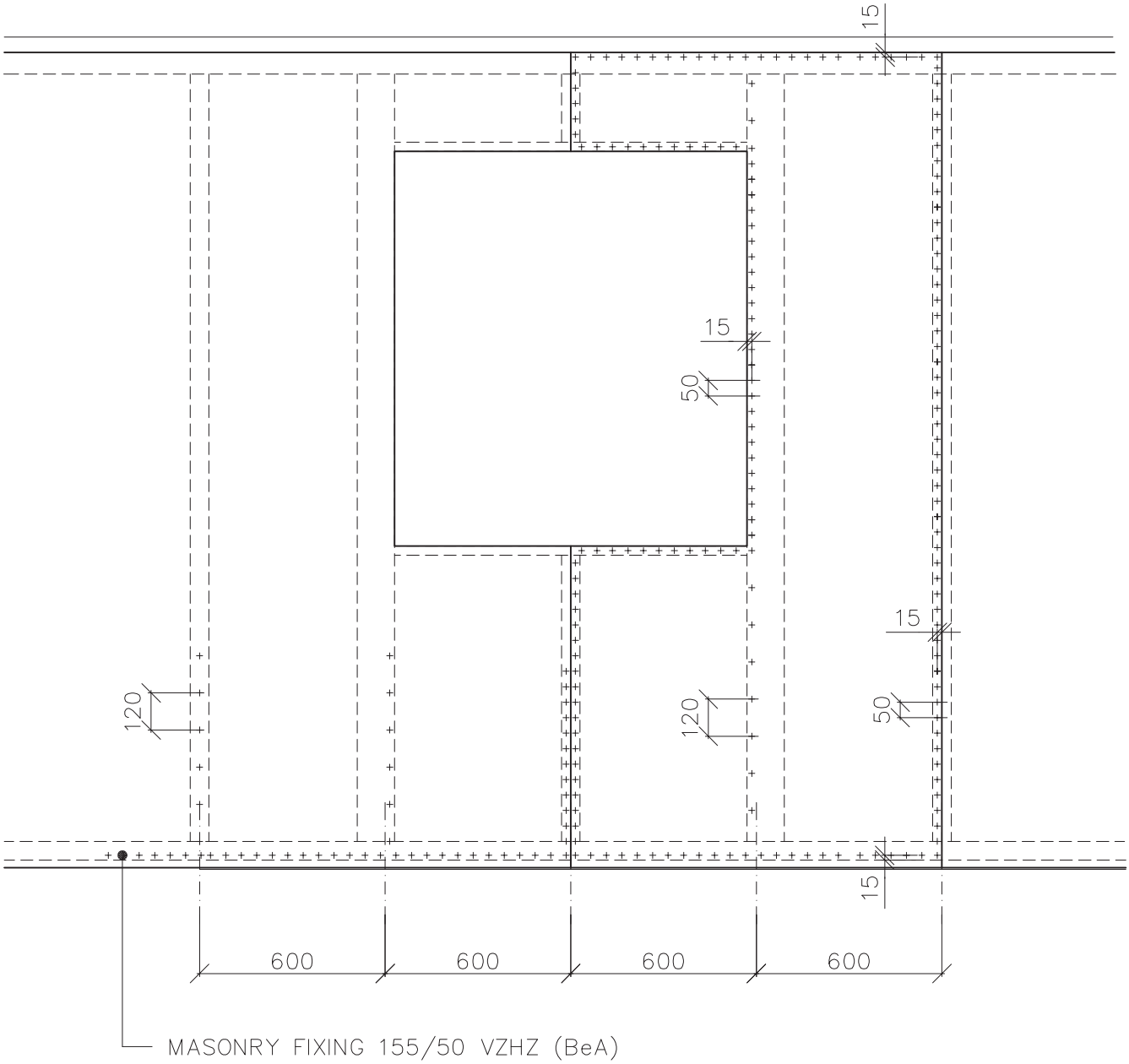

Scale applies to original 1:20	Remark: DETACHED HOUSE		Date				
	Worked out by:	Kohoutek Petr	01/06	Alternation	Date	Signature	Index x x x x x
	Authorized by:						
	Type: FRONT, BACK WALL						
RD RÝMAŘOV	FIXATION OF THE SHEATING ON THE FRAME – TH. 225/265/297				RD C 005		

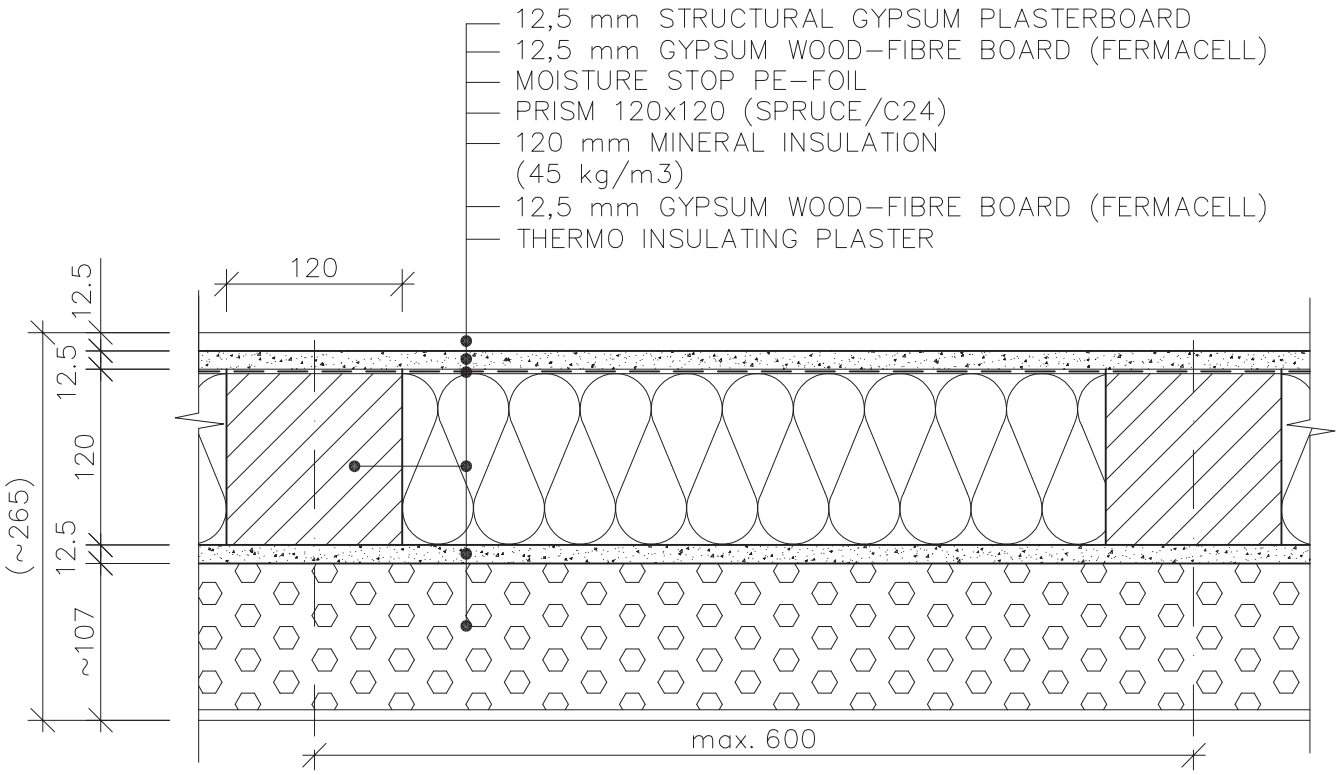

Scale applies to original 1:5	Remark: DETACHED HOUSE		Date				
	Worked out by:	Ing. Pavel Krupa	09/07	Alternation	Date	Signature	Index x x x x x
	Authorized by:	Tomáš Jánošík	09/07				
RD RÝMAŘOV	Type: FRONT, BACK WALL						
	HORIZONTAL SECTIONAL VIEW – TH. 265						RD C 006

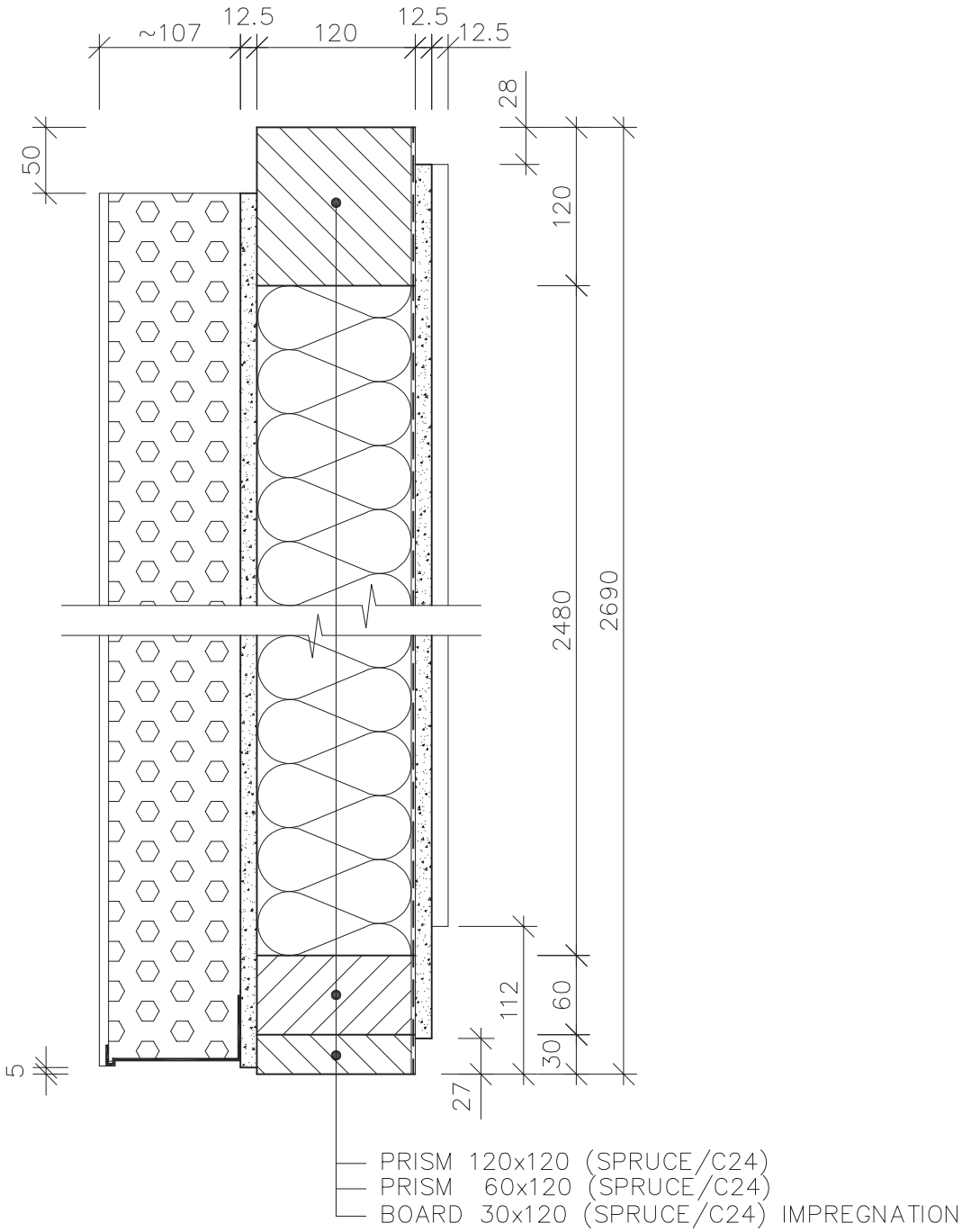

Scale applies to original 1:5	Remark: DETACHED HOUSE		Date				
	Worked out by:	Ing. Pavel Krupa	09/07	Alternation	Date	Signature	Index x
	Authorized by:	Tomáš Jánošík	09/07				x x x x
RD RÝMAŘOV	Type: FRONT, BACK WALL						
	VERTICAL SECTIONAL VIEW – TH. 265						RD C 007

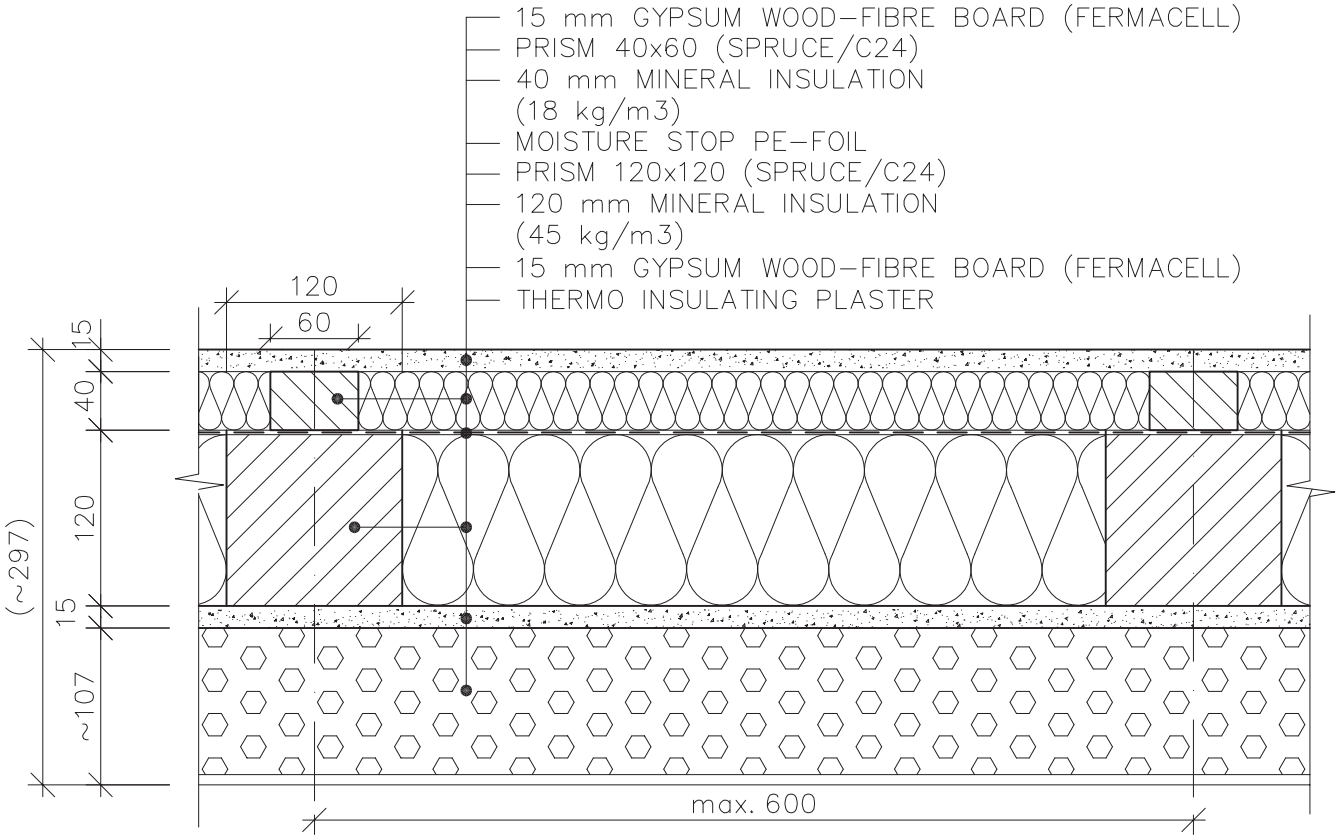

Scale applies to original 1:5	Remark: DETACHED HOUSE		Date				
	Worked out by:	Ing. Pavel Krupa	09/07	Alternation	Date	Signature	Index x
	Authorized by:	Tomáš Jánošík	09/07				x x x x
RD RÝMAŘOV	Type: FRONT, BACK WALL						
	HORIZONTAL SECTIONAL VIEW – TH. 297						RD C 008

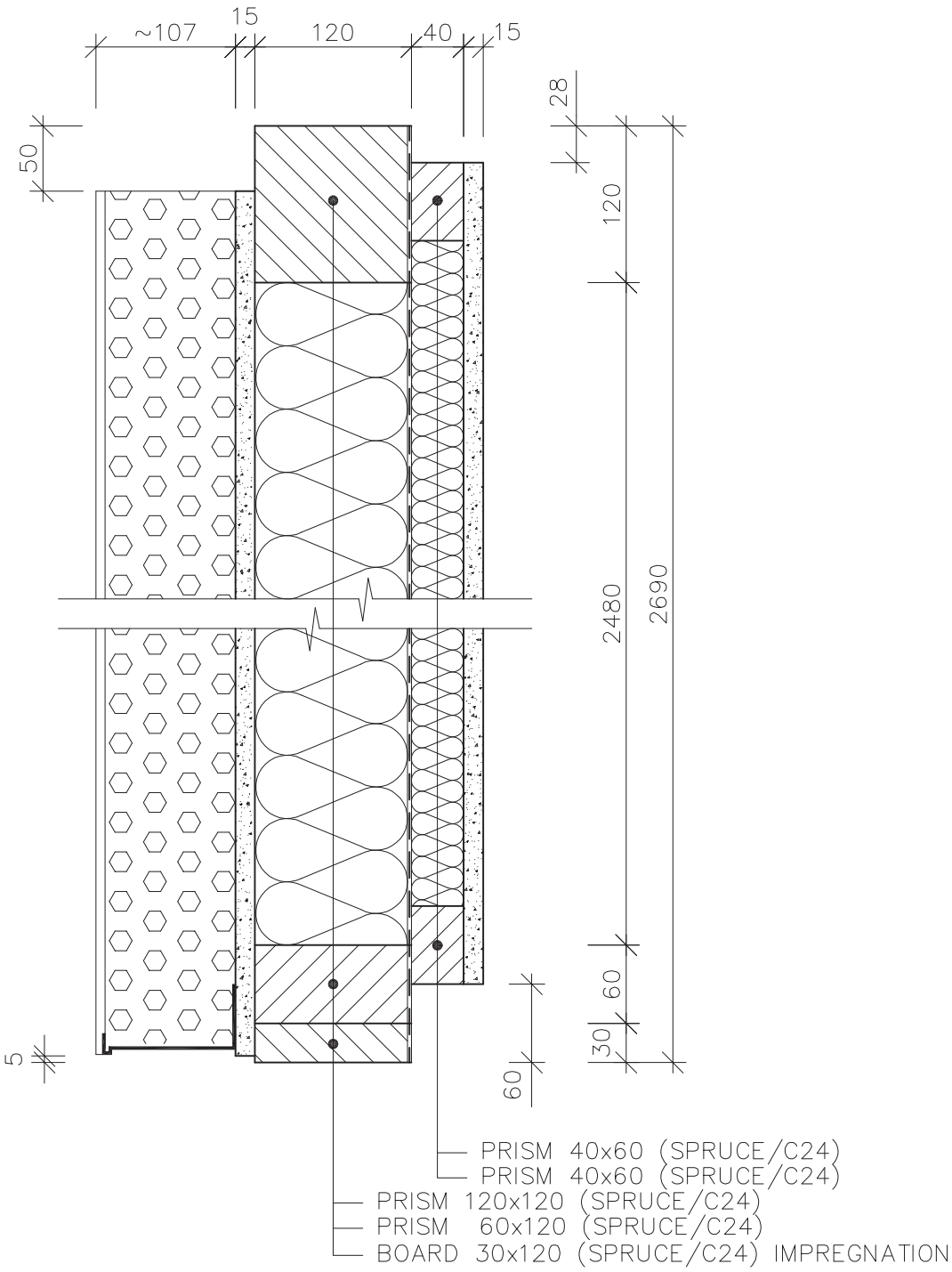

Scale applies to original 1:5	Remark: DETACHED HOUSE		Date				
	Worked out by:	Ing. Pavel Krupa	09/07	Alternation	Date	Signature	Index x
	Authorized by:	Tomáš Jánošík	09/07				x x x x
RD RÝMAŘOV	Type: FRONT, BACK WALL						
	VERTICAL SECTIONAL VIEW – TH. 297						RD C 009

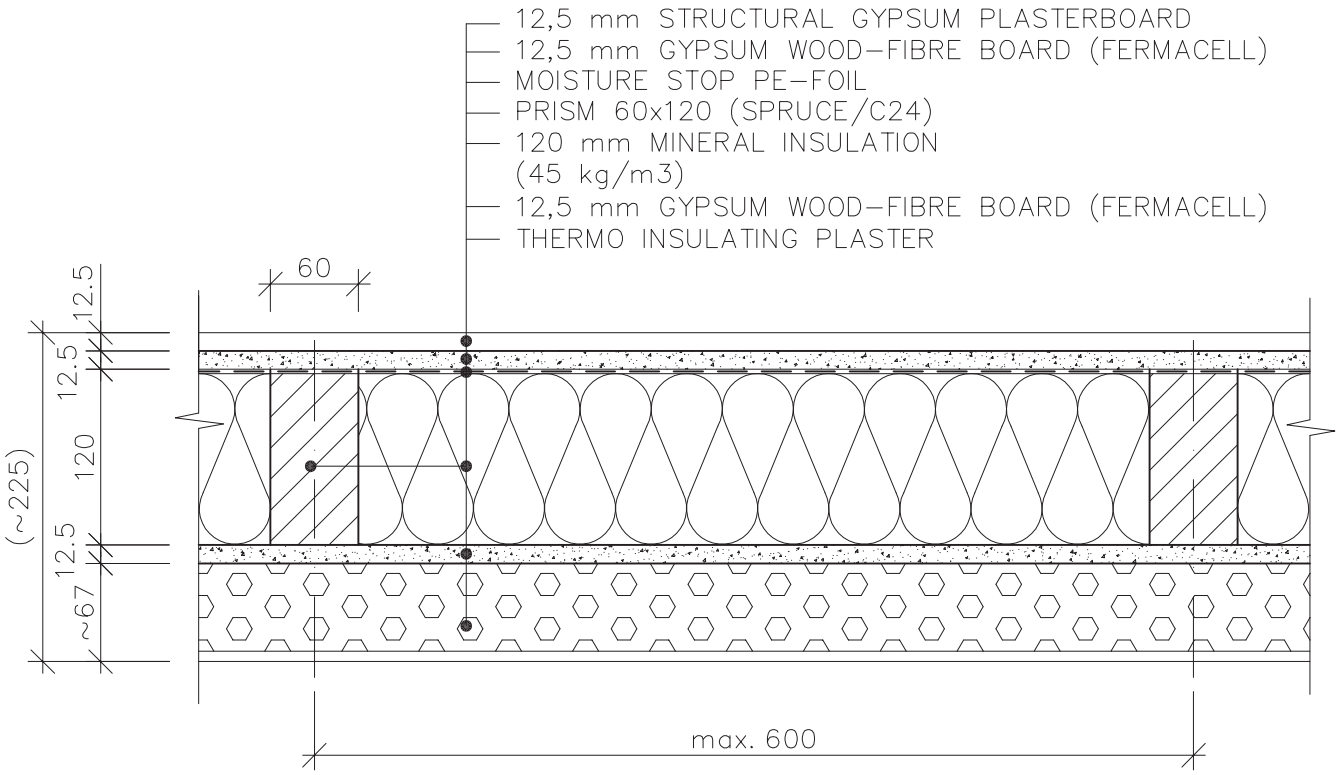

Scale applies to original 1:5	Remark: DETACHED HOUSE		Date				
	Worked out by:	Jánošík Tomáš	01/06	Alternation	Date	Signature	Index x x x x x
	Authorized by:						
RD RÝMAŘOV	Type: GABLE WALL						
	HORIZONTAL SECTIONAL VIEW – TH. 225				RD C 011		

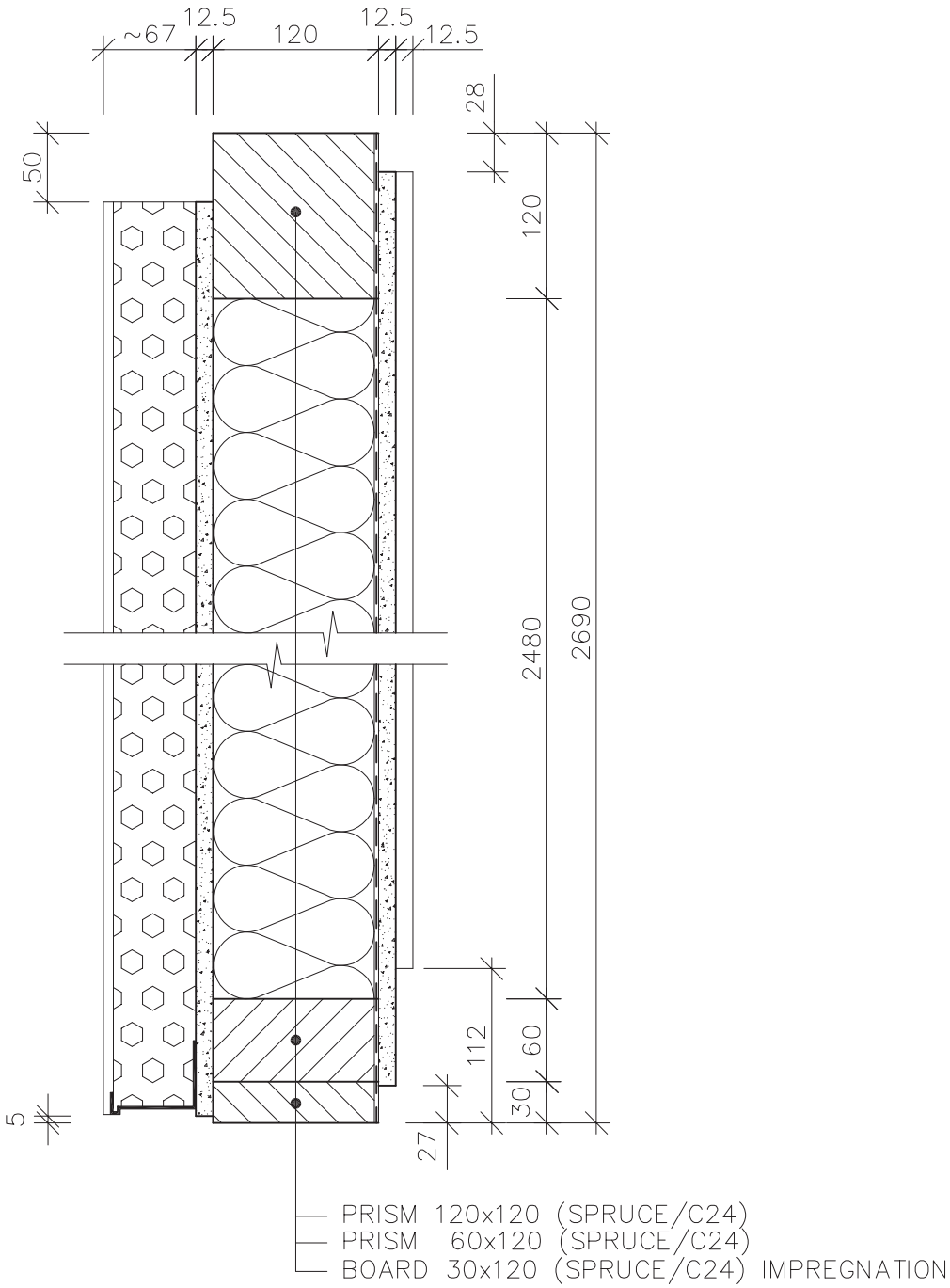

Scale applies to original 1:5	Remark: DETACHED HOUSE		Date				
	Worked out by:	Jánošík Tomáš	01/06	Alternation	Date	Signature	Index
	Authorized by:						x x x x x
RD RÝMAŘOV	Type: GABLE WALL						
	VERTICAL SECTIONAL VIEW – TH. 225				RD C 012		

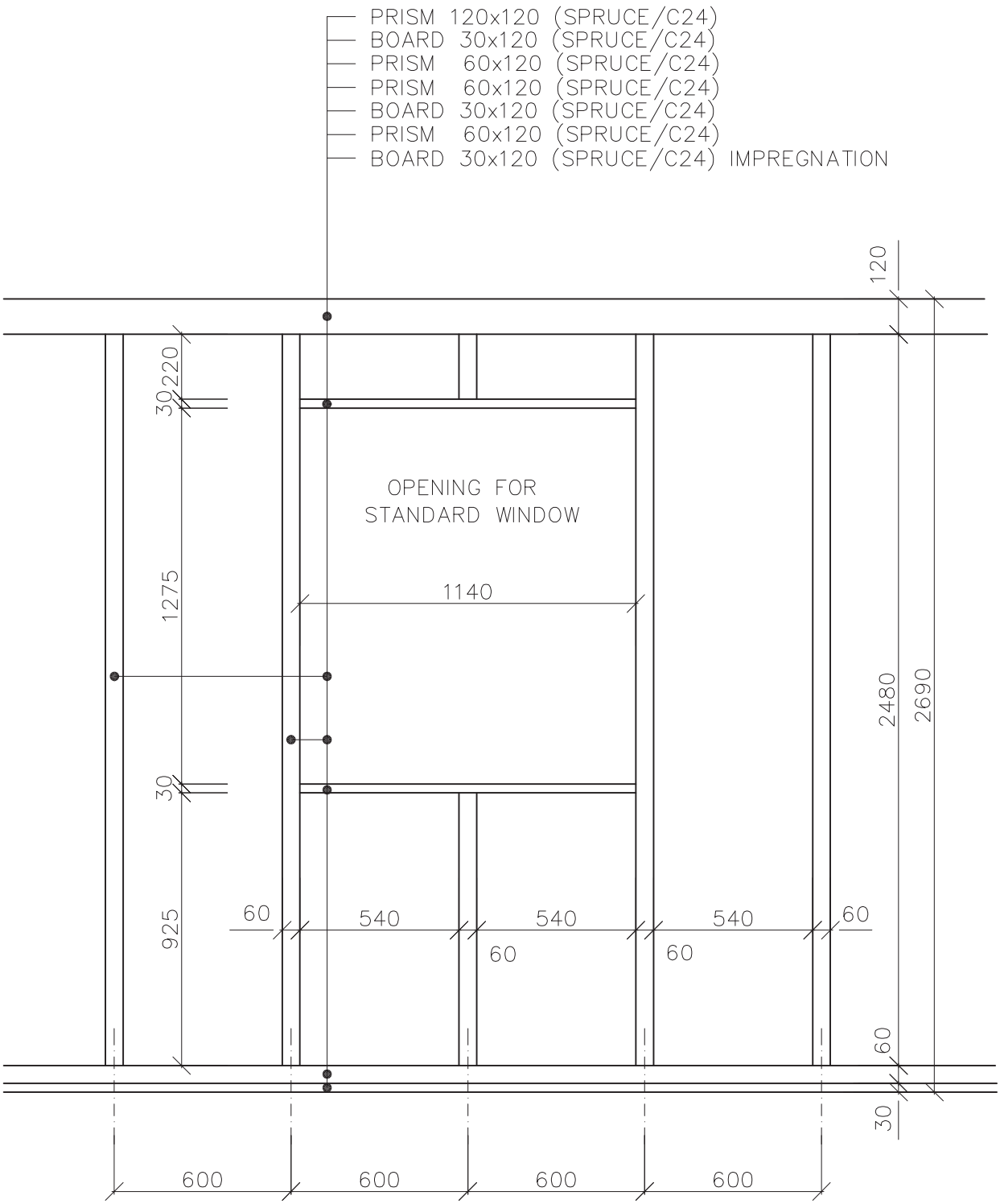

Scale applies to original 1:20	Remark: DETACHED HOUSE		Date				
	Worked out by:	Jánošík Tomáš	01/06	Alternation	Date	Signature	Index x x x x x
	Authorized by:						
RD RÝMAŘOV	Type: GABLE WALL						
	VIEW OF THE FRAME – TH. 225/265/297				RD C 013		

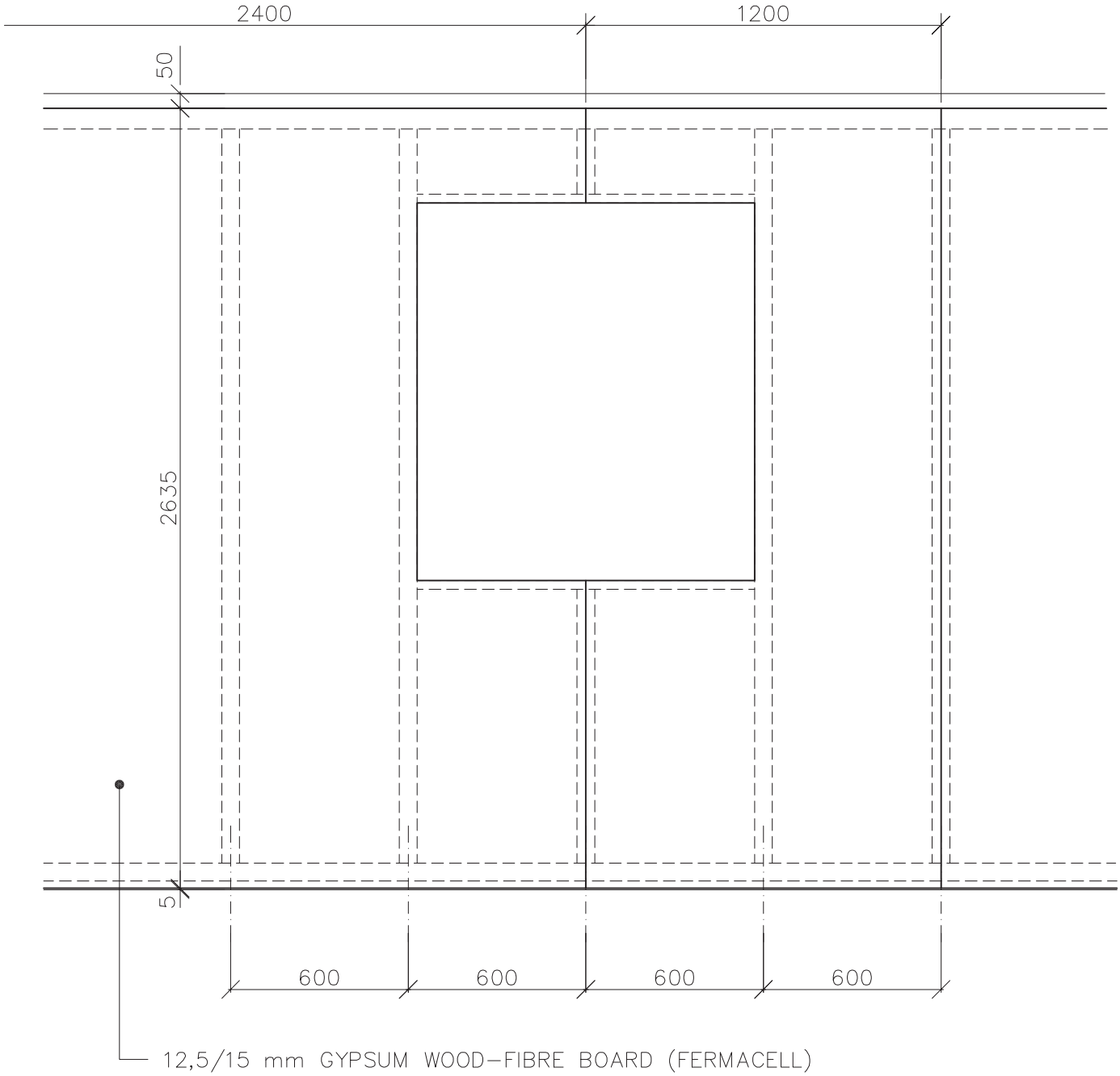

Scale applies to original 1:20	Remark: DETACHED HOUSE		Date				
	Worked out by:	Jánošík Tomáš	01/06	Alternation	Date	Signature	Index
	Authorized by:						x x x x x
RD RÝMAŘOV	Type: GABLE WALL						
	VIEW OF THE SHEATHING – TH. 225/265/297						RD C 014

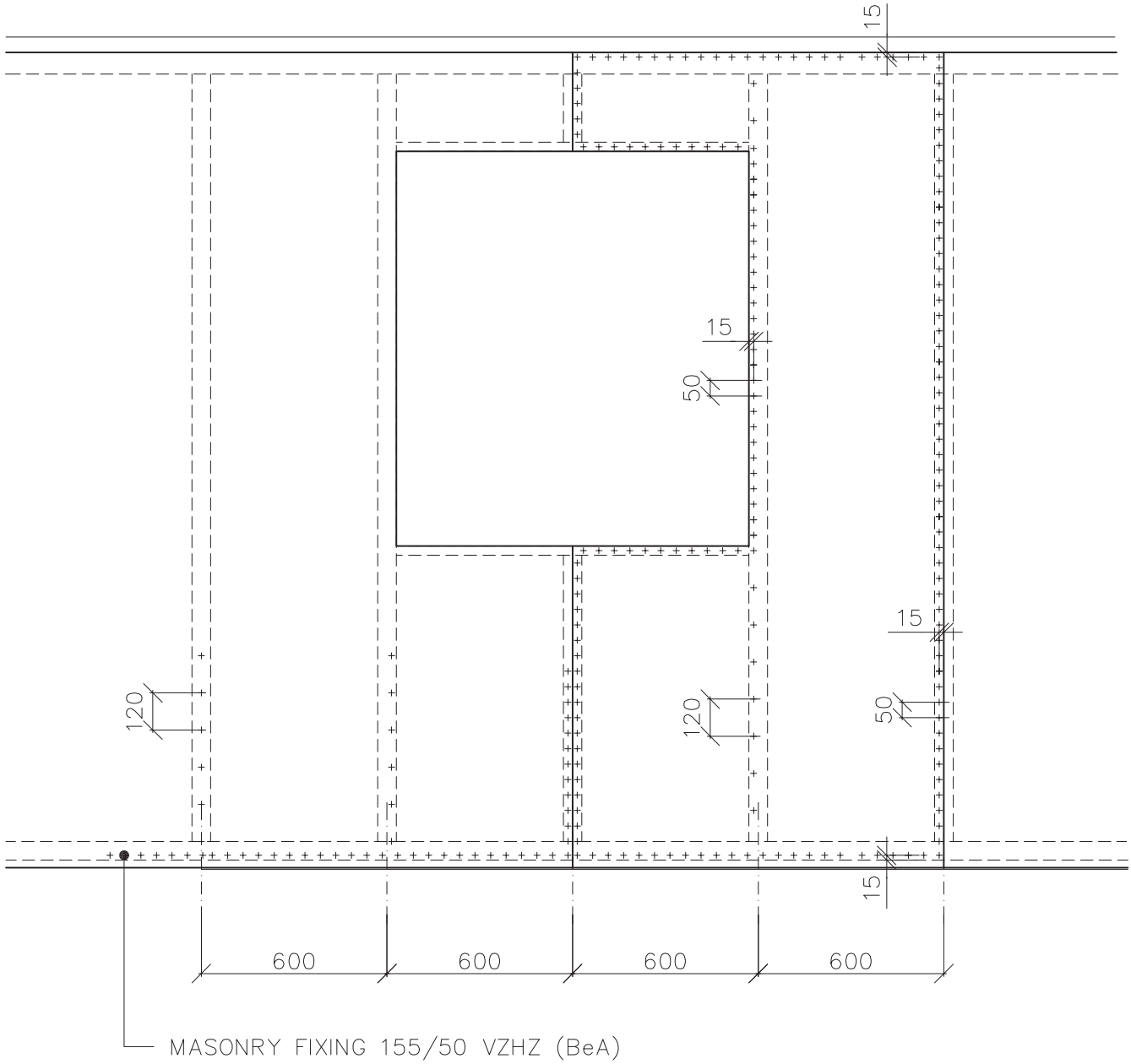

Scale applies to original 1:20	Remark: DETACHED HOUSE		Date				
	Worked out by:	Jánošík Tomáš	01/06	Alternation	Date	Signature	Index x x x x x
	Authorized by:						
RD RÝMAŘOV	Type: GABLE WALL						
	FIXATION OF THE SHEATING ON THE FRAME – TH. 225/265/297				RD C 015		

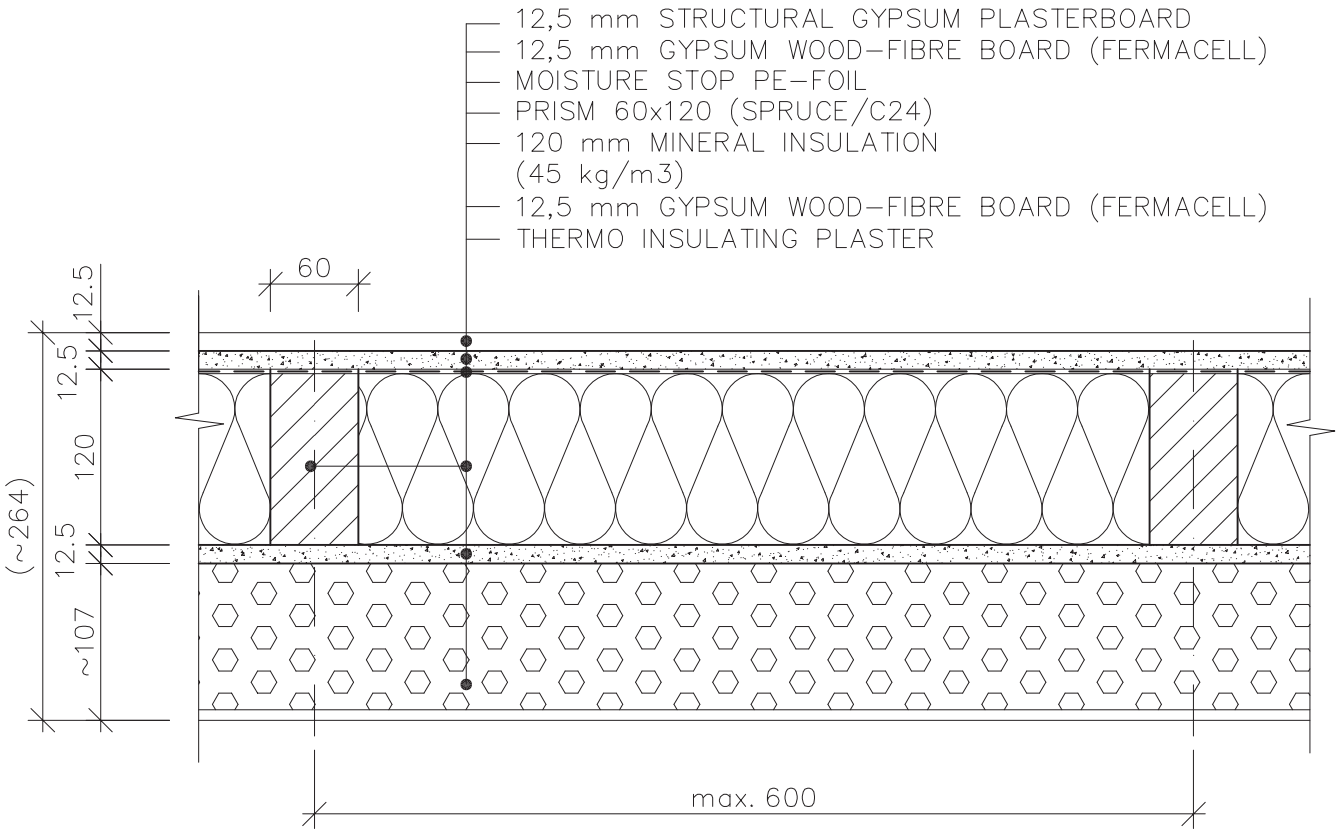

Scale applies to original 1:5	Remark: DETACHED HOUSE		Date				
	Worked out by:	Ing. Pavel Krupa	09/07	Alternation	Date	Signature	Index x x x x x
	Authorized by:	Tomáš Jánošík	09/07				
RD RÝMAŘOV	Type: GABLE WALL						
	HORIZONTAL SECTIONAL VIEW – TH. 265						RD C 016

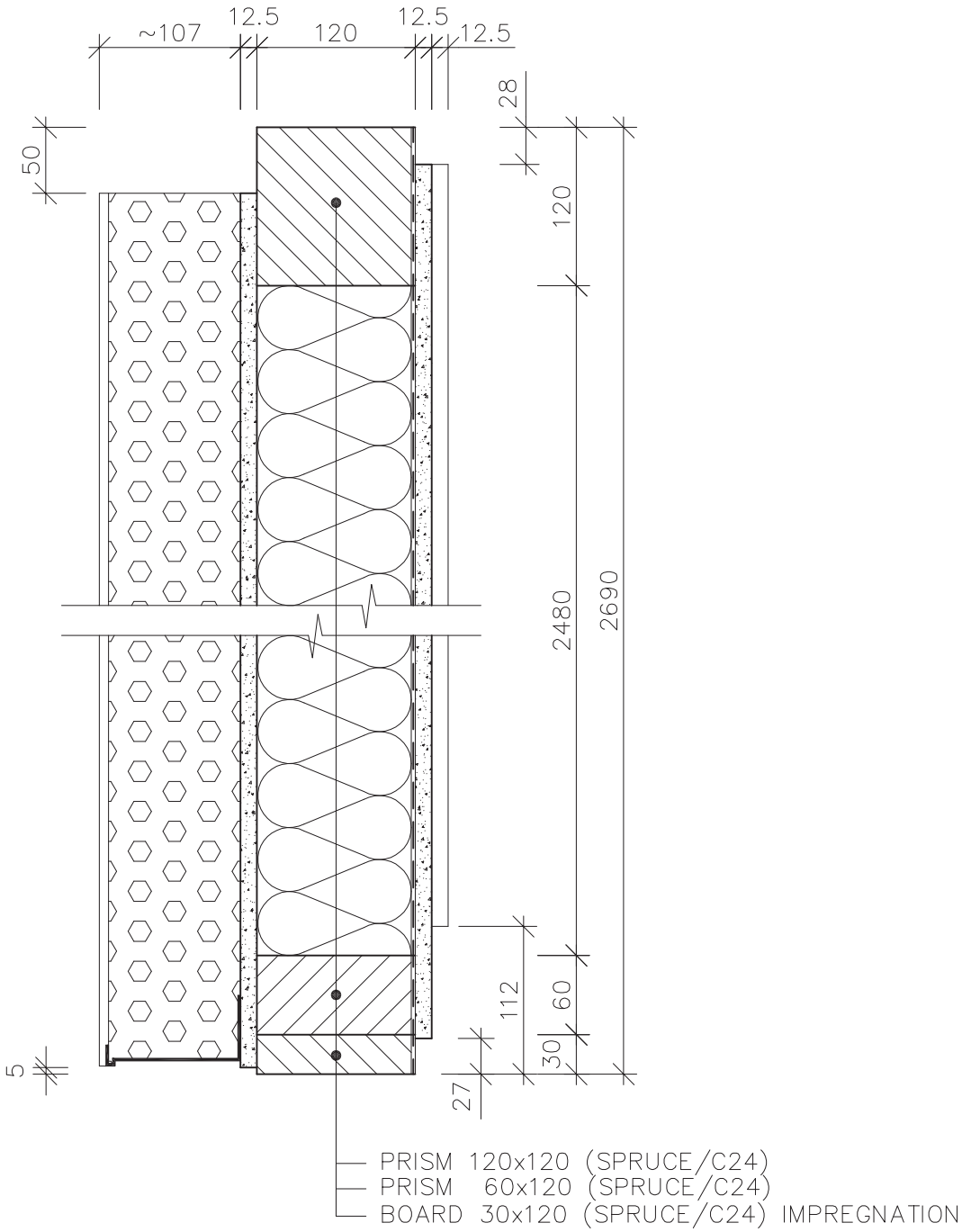

Scale applies to original 1:5	Remark: DETACHED HOUSE		Date				
	Worked out by:	Ing. Pavel Krupla	09/07	Alternation	Date	Signature	Index x
	Authorized by:	Tomáš Jánošík	09/07				x x x x
RD RÝMAŘOV	Type: GABLE WALL						
	VERTICAL SECTIONAL VIEW – TH. 265						RD C 017

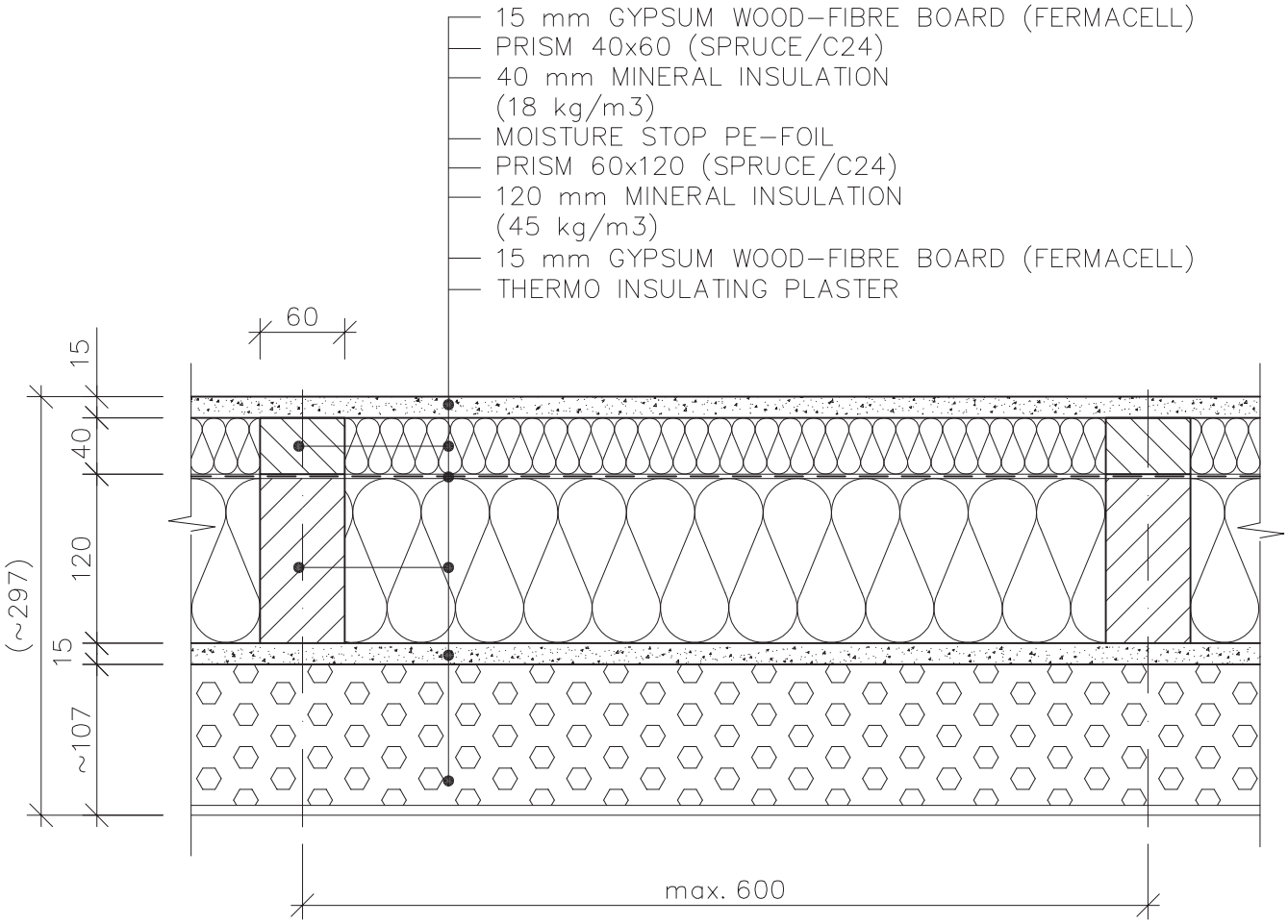

Scale applies to original 1:5	Remark: DETACHED HOUSE		Date				
	Worked out by:	Ing. Pavel Krupa	09/07	Alternation	Date	Signature	Index x
	Authorized by:	Tomáš Jánošík	09/07				x x x x
RD RÝMAŘOV	Type: GABLE WALL						
	HORIZONTAL SECTIONAL VIEW – TH. 297						RD C 018

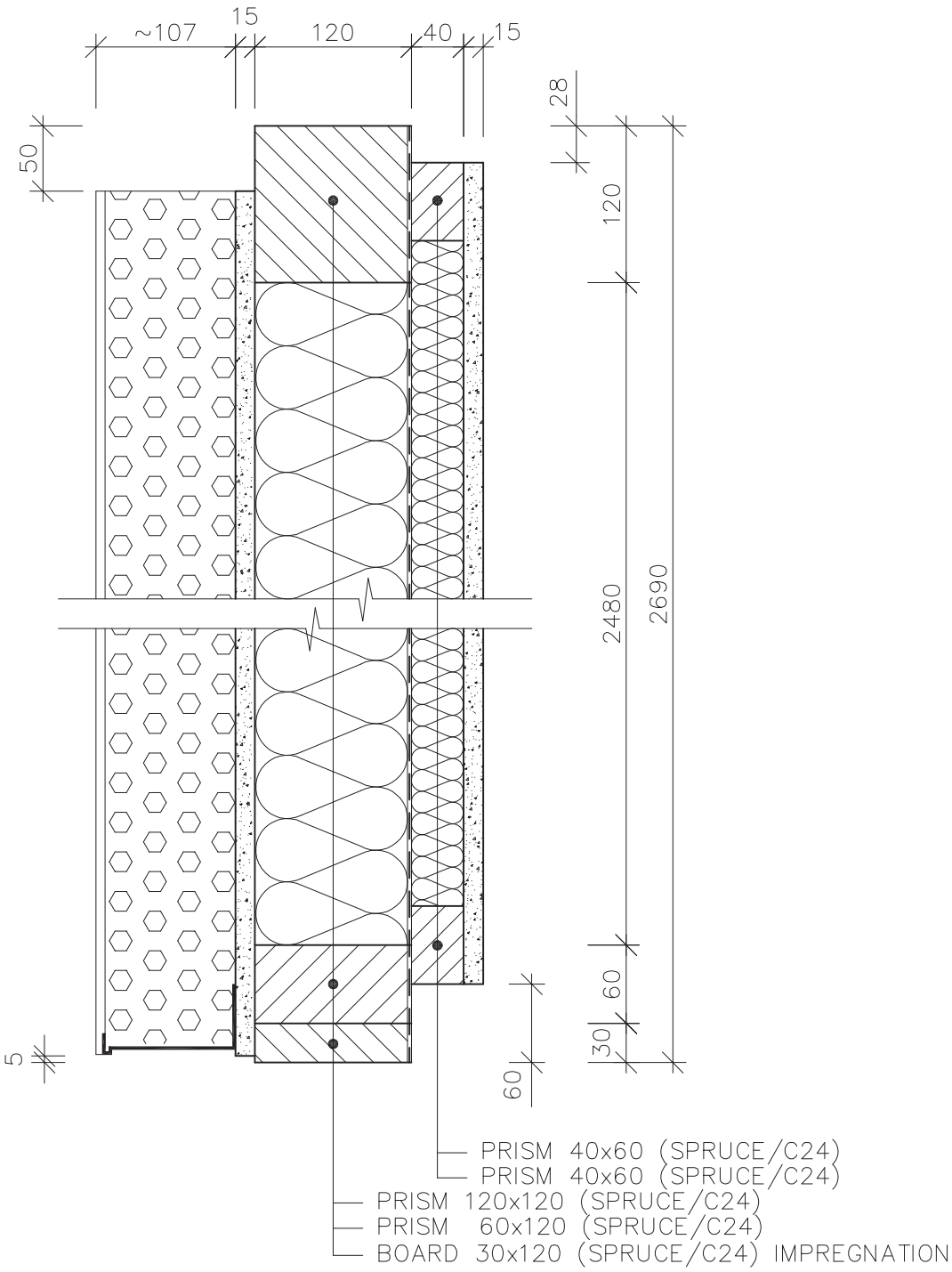

Scale applies to original 1:5	Remark: DETACHED HOUSE		Date				
	Worked out by:	Ing. Pavel Krupla	09/07	Alternation	Date	Signature	Index x x x x x
	Authorized by:	Tomáš Jánošík	09/07				
RD RÝMAŘOV	Type: GABLE WALL						
	VERTICAL SECTIONAL VIEW – TH. 297						RD C 019

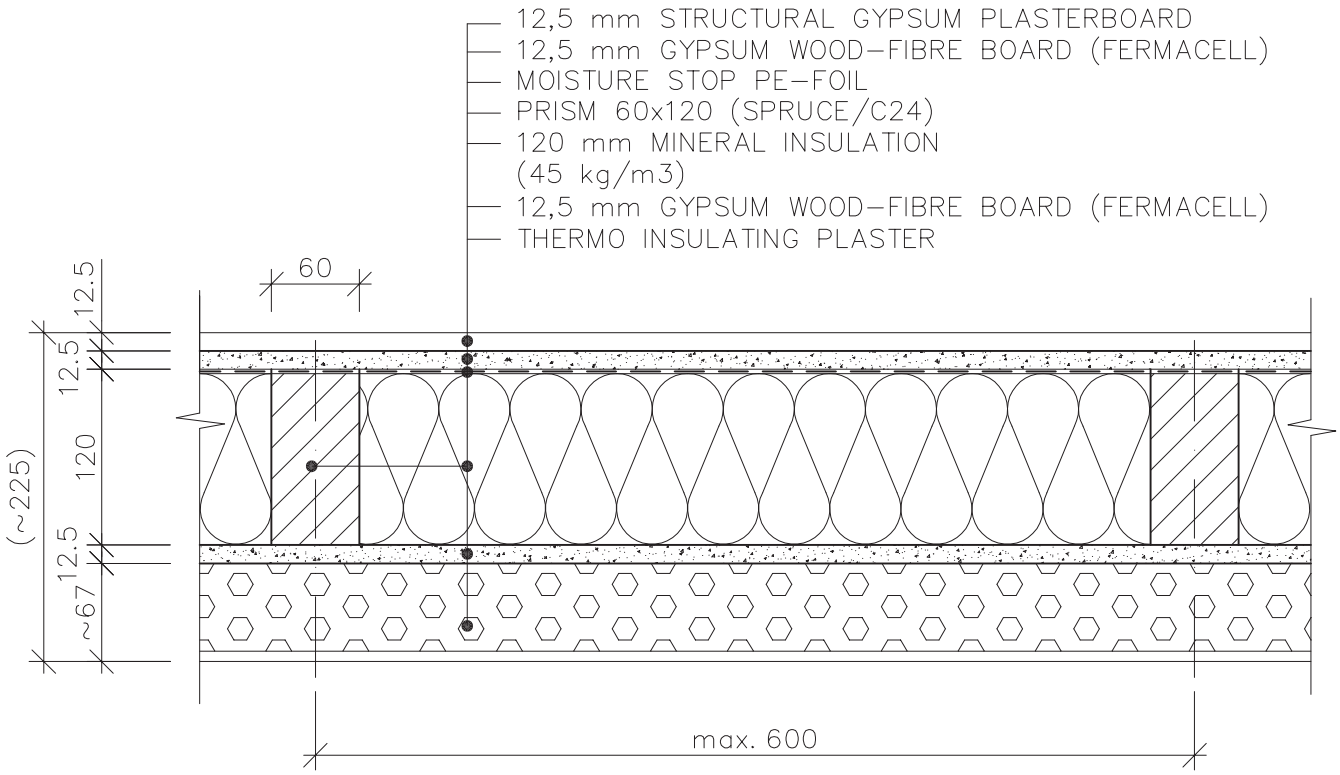

Scale applies to original 1:5	Remark: DETACHED HOUSE		Date				
	Worked out by:	Jánošík Tomáš	01/06	Alternation	Date	Signature	Index x x x x x
	Authorized by:						
RD RÝMAŘOV	Type: EXTERNAL WALL ATTIC						
	HORIZONTAL SECTIONAL VIEW – TH. 225			RD C 021			

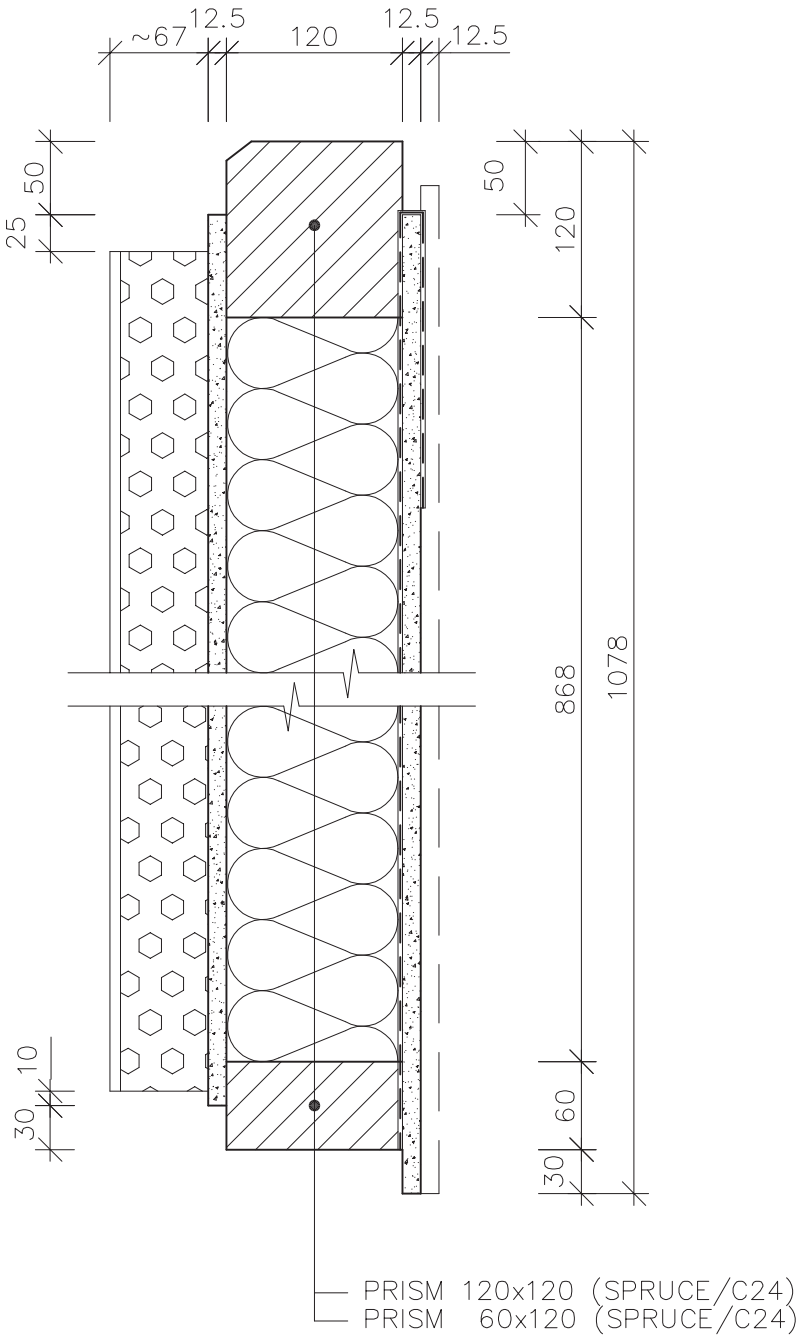

Scale applies to original 1:5	Remark: DETACHED HOUSE – FOR INCLIN. 38°		Date				
	Worked out by:	Jánošík Tomáš	01/06	Alternation	Date	Signature	Index
	Authorized by:						
	Type: EXTERNAL WALL ATTIC						
RD RÝMAŘOV	VERTICAL SECTIONAL VIEW – TH. 225				RD C 022		

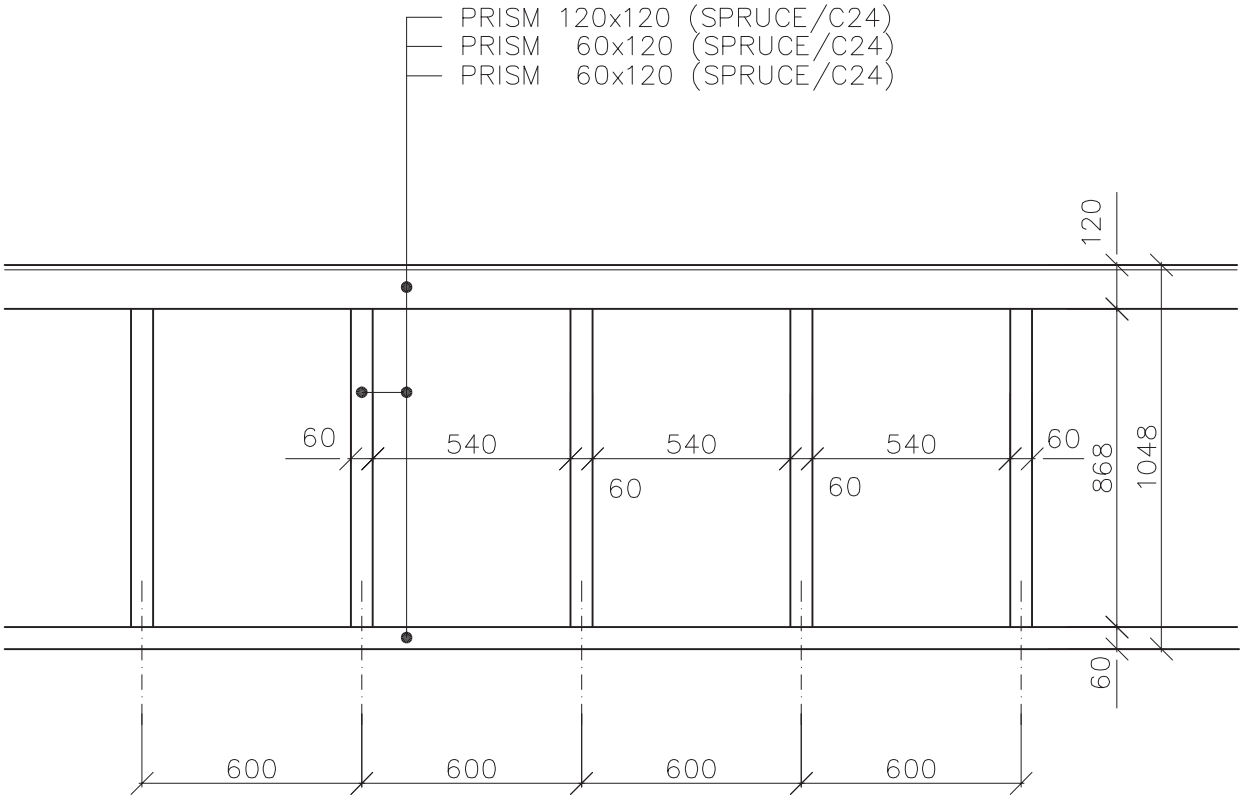

Scale applies to original 1:20	Remark: DETACHED HOUSE – FOR INCLIN. 38°		Date				
	Worked out by:	Jánošík Tomáš	01/06	Alternation	Date	Signature	Index
	Authorized by:						x x x x x
RD RÝMAŘOV	Type: EXTERNAL WALL ATTIC						
	VIEW OF THE FRAME – TH. 225/265/297				RD C 023		

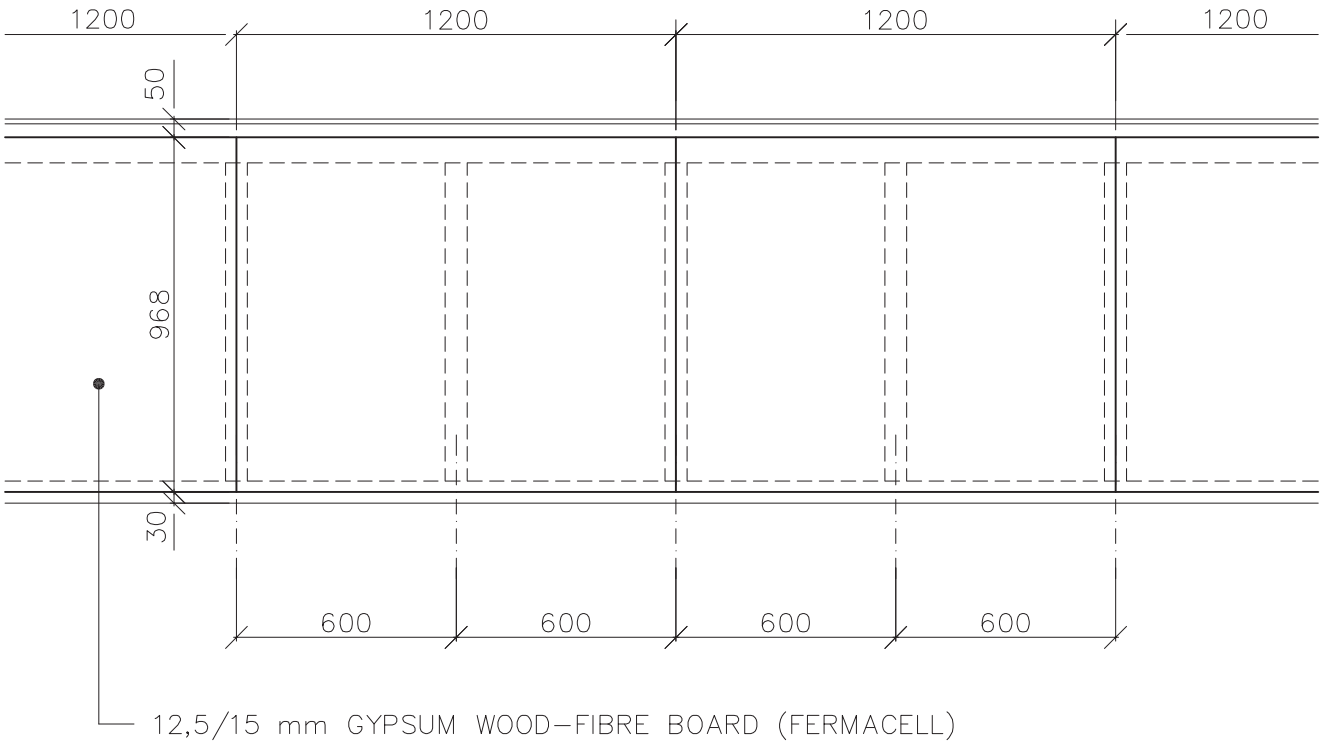

Scale applies to original 1:20	Remark: DETACHED HOUSE – FOR INCLIN. 38°		Date				
	Worked out by:	Jánošík Tomáš	01/06	Alternation	Date	Signature	Index
	Authorized by:						x x x x x
RD RÝMAŘOV	Type: EXTERNAL WALL ATTIC						
	VIEW OF THE SHEATHING – TH. 225/265/297						RD C 024

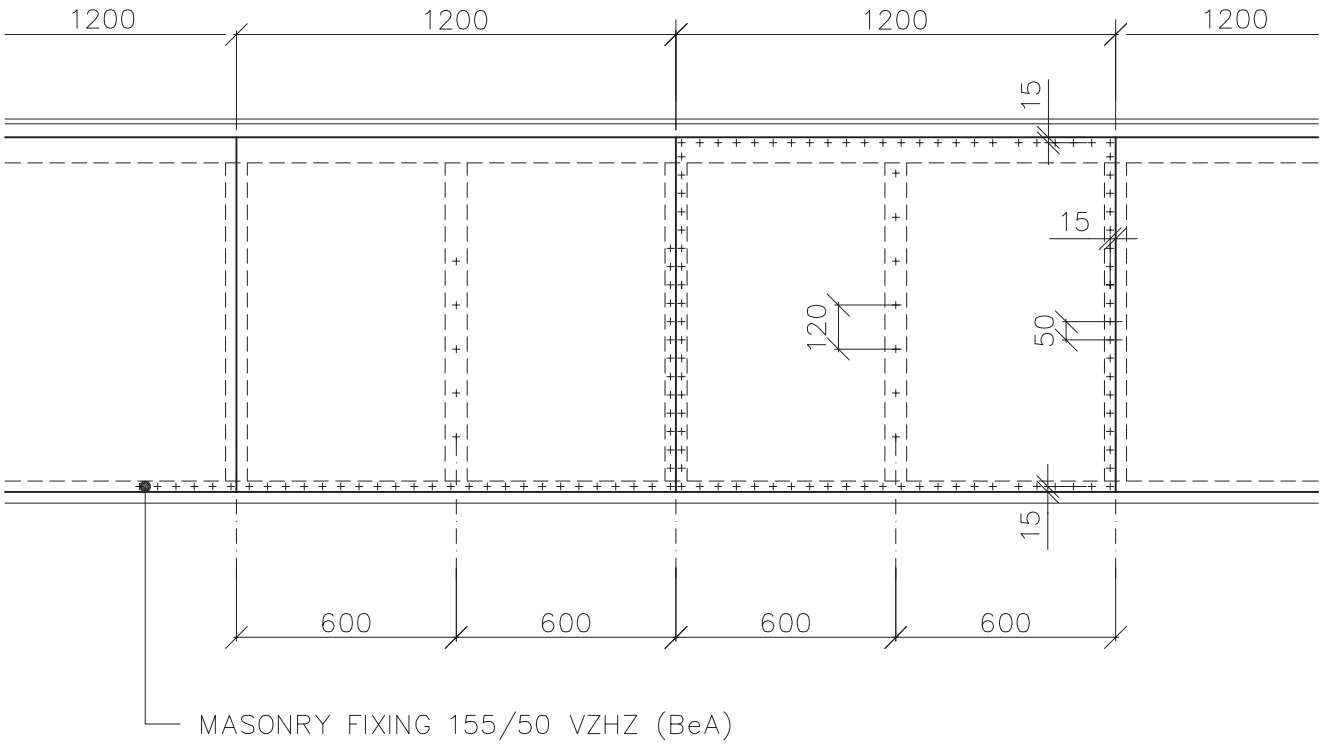

Scale applies to original 1:20	Remark: DETACHED HOUSE – FOR INCLIN. 38°		Date				
	Worked out by:	Jánošík Tomáš	01/06	Alternation	Date	Signature	Index
	Authorized by:						x x x x x
RD RÝMAŘOV	Type: EXTERNAL WALL ATTIC						
	FIXATION OF THE SHEATING ON THE FRAME – TH. 225/265/297				RD C 025		

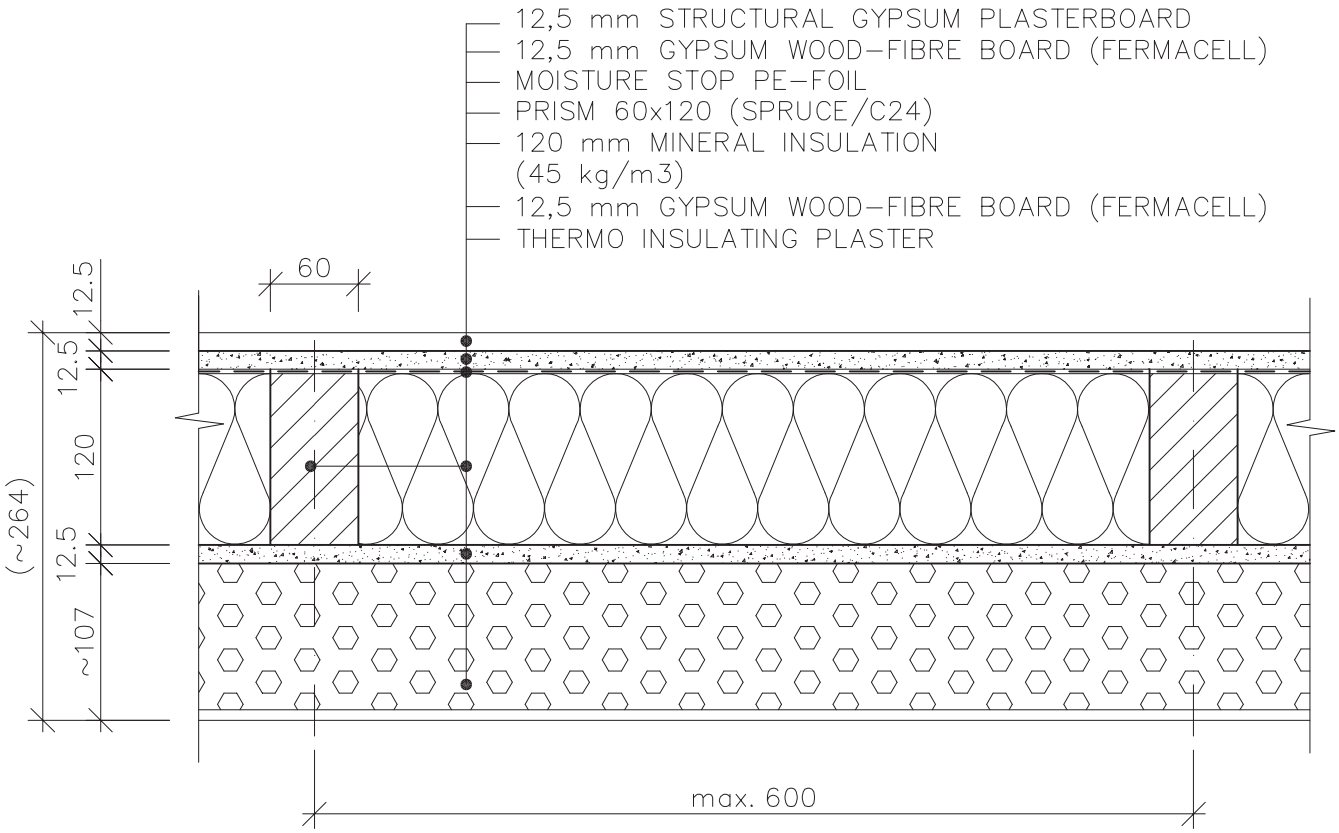

Scale applies to original 1:5	Remark: DETACHED HOUSE		Date				
	Worked out by:	Ing. Pavel Krupa	09/07	Alternation	Date	Signature	Index x x x x x
	Authorized by:	Tomáš Jánošík	09/07				
RD RÝMAŘOV	Type: EXTERNAL WALL ATTIC						
	HORIZONTAL SECTIONAL VIEW – TH. 265					RD C 026	

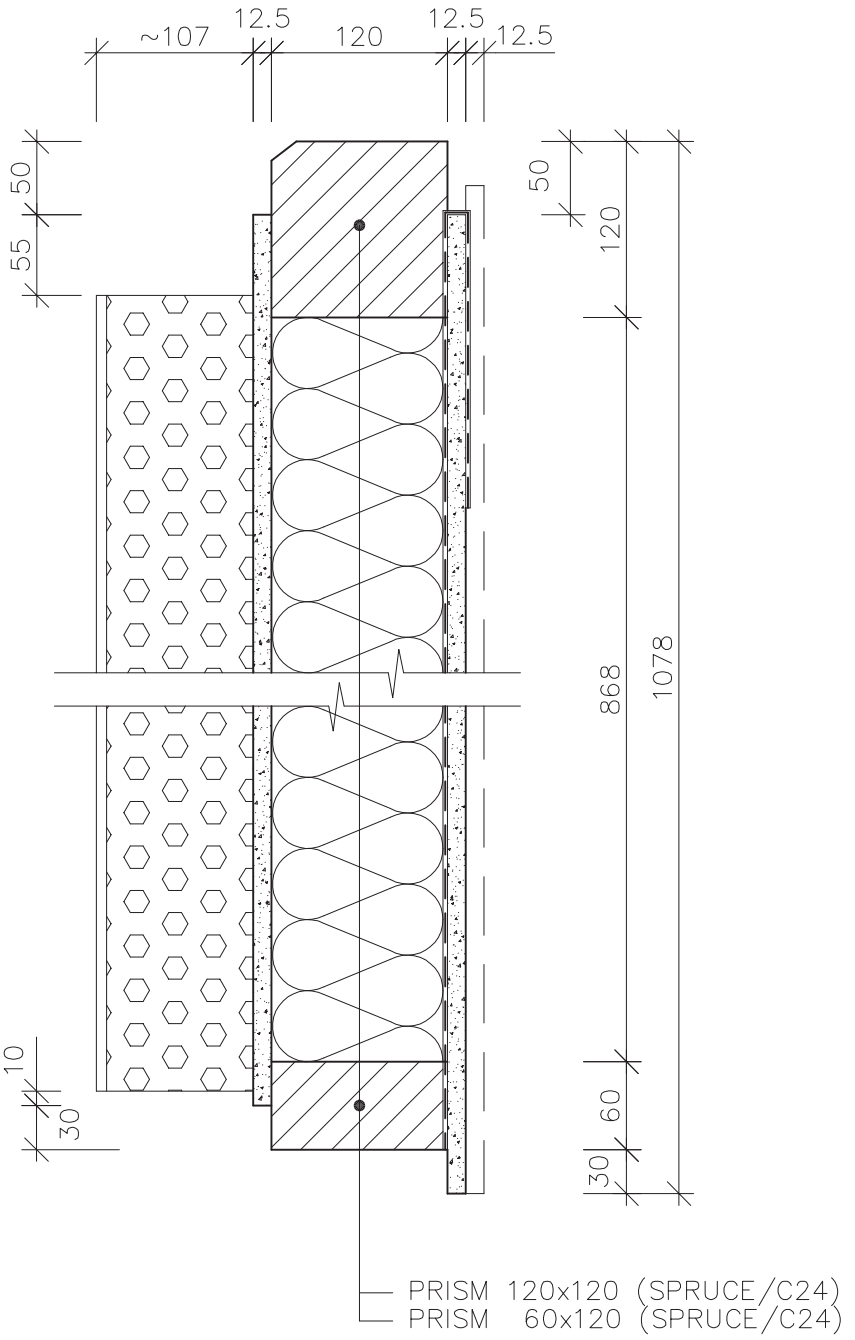

Scale applies to original 1:5	Remark: DETACHED HOUSE – FOR INCLIN. 38°		Date				
	Worked out by:	Ing. Pavel Krupa	09/07	Alternation	Date	Signature	Index
	Authorized by:	Tomáš Jánošík	09/07				x x x x x
RD RÝMAŘOV	Type: EXTERNAL WALL ATTIC						
	VERTICAL SECTIONAL VIEW – TH. 265						RD C 027

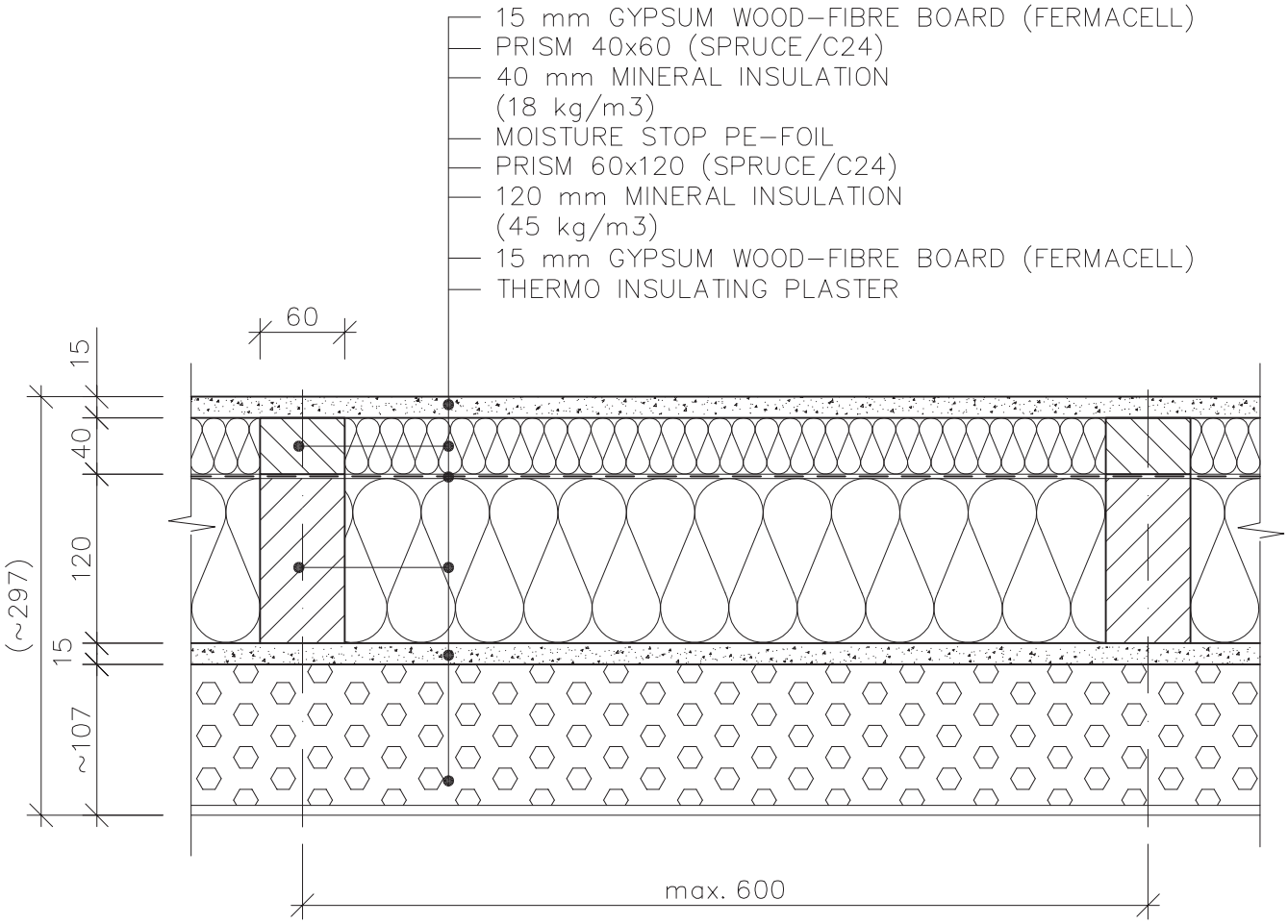

Scale applies to original 1:5	Remark: DETACHED HOUSE		Date				
	Worked out by:	Ing. Pavel Krupa	09/07	Alternation	Date	Signature	Index x
	Authorized by:	Tomáš Jánošík	09/07				x x x x
RD RÝMAŘOV	Type: EXTERNAL WALL ATTIC						
	HORIZONTAL SECTIONAL VIEW – TH. 297						RD C 028

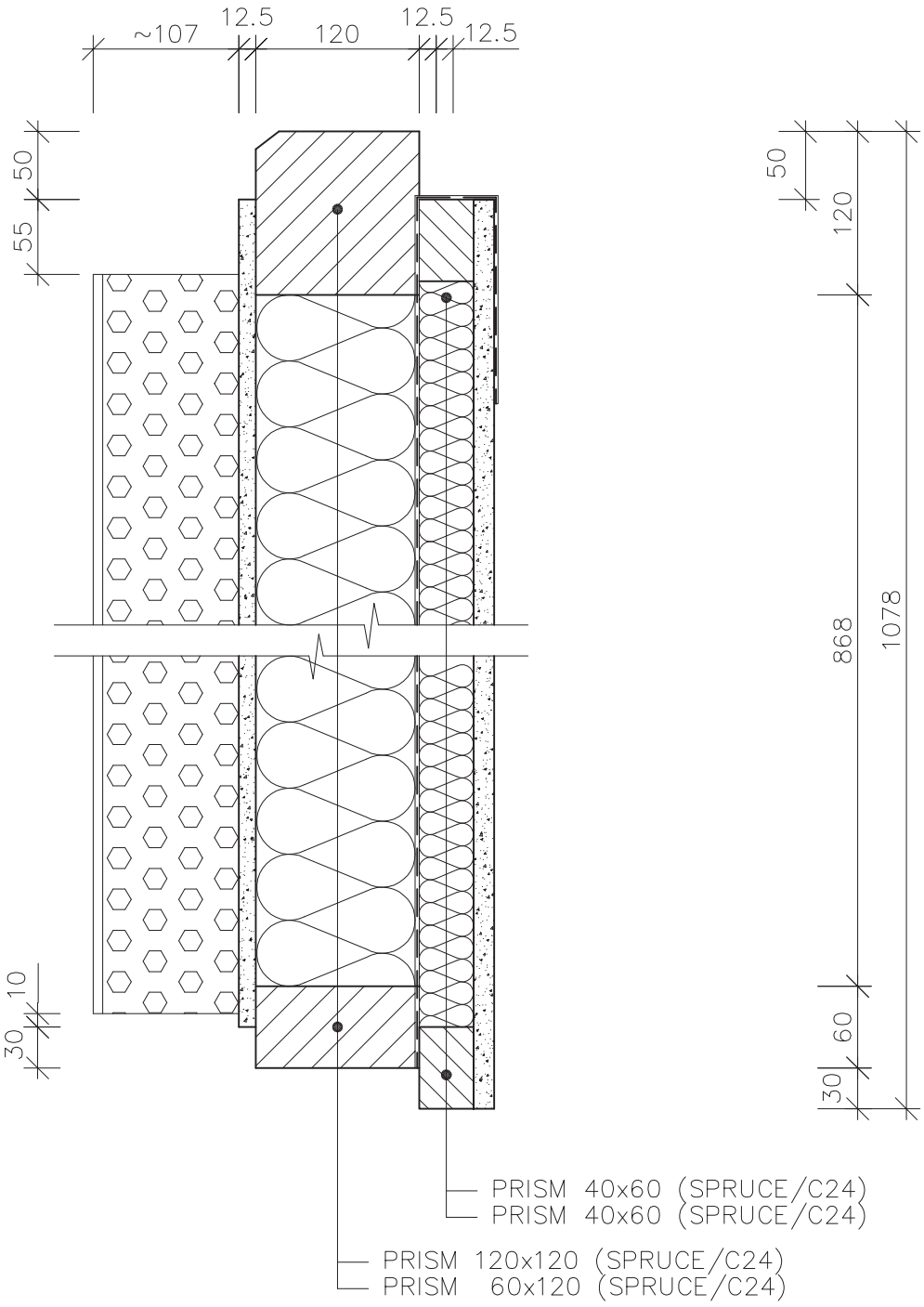

Scale applies to original 1:5	Remark: DETACHED HOUSE – FOR INCLIN. 38°		Date				
	Worked out by:	Ing. Pavel Krupa	09/07	Alternation	Date	Signature	Index
	Authorized by:	Tomáš Jánošík	09/07				x x x x x
RD RÝMAŘOV	Type: EXTERNAL WALL ATTIC						
	VERTICAL SECTIONAL VIEW – TH. 297						RD C 029

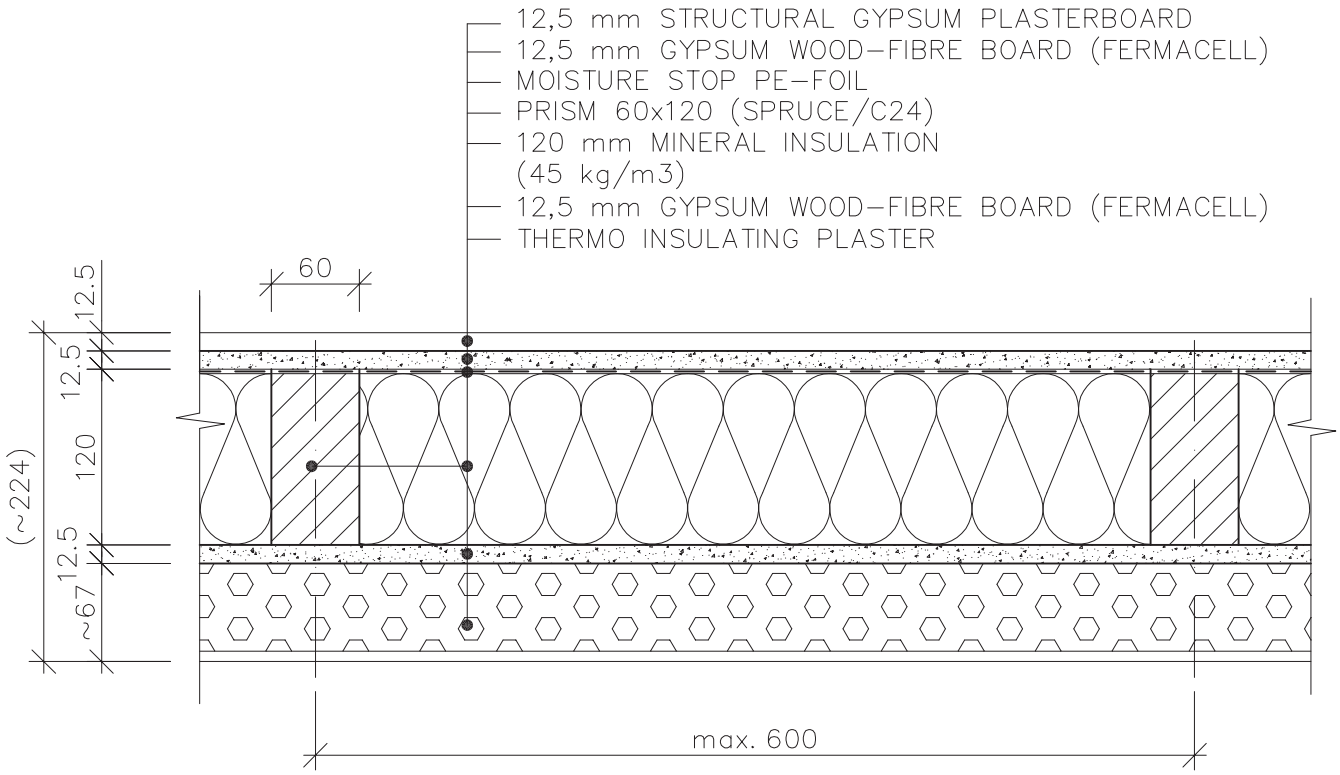

Scale applies to original 1:5	Remark: DETACHED HOUSE		Date				
	Worked out by:	Jánošík Tomáš	01/06	Alternation	Date	Signature	Index x x x x x
	Authorized by:						
RD RÝMAŘOV	Type: GABLE						
	HORIZONTAL SECTIONAL VIEW – TH. 225				RD C 031		

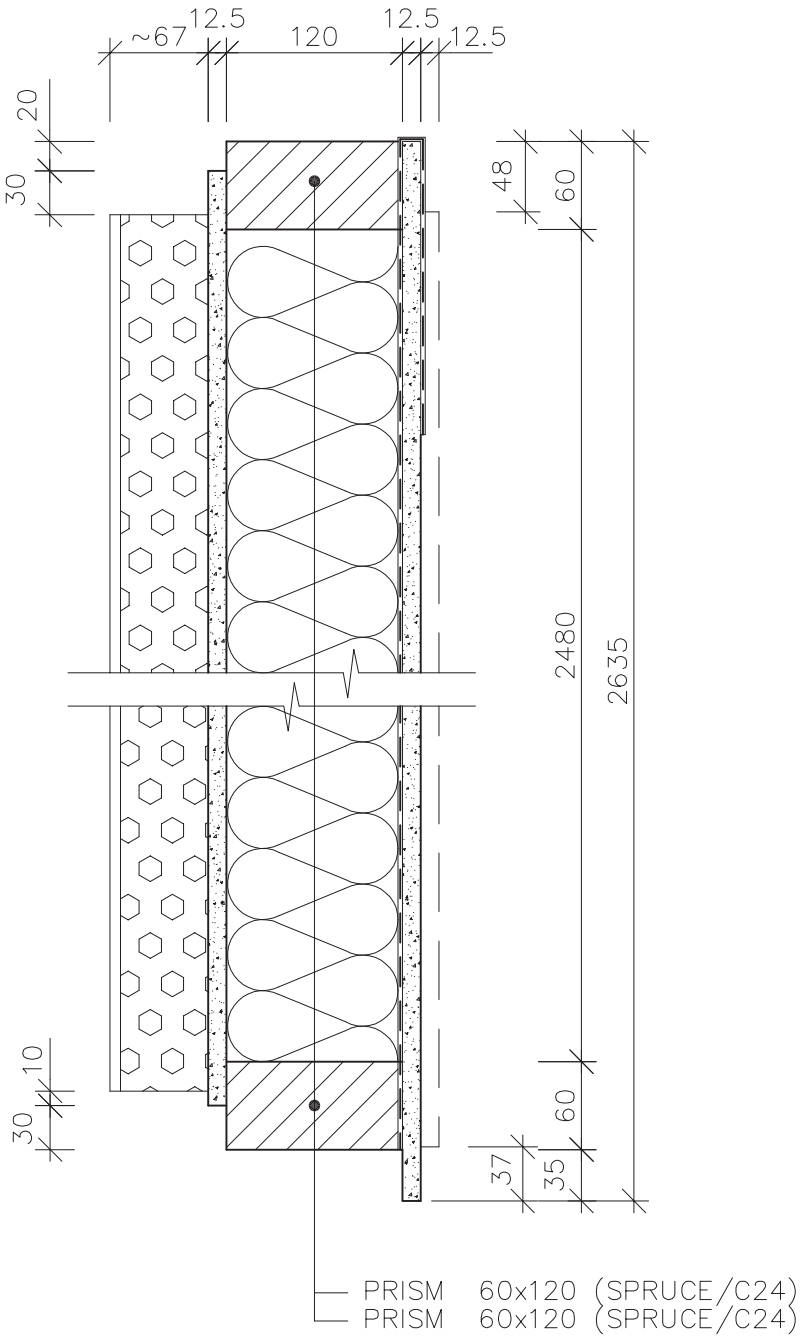

Scale applies to original 1:5	Remark: DETACHED HOUSE		Date				
	Worked out by:	Jánošík Tomáš	01/06	Alternation	Date	Signature	Index x x x x x
	Authorized by:						
RD RÝMAŘOV	Type: GABLE						
	VERTICAL SECTIONAL VIEW – TH. 225				RD C 032		

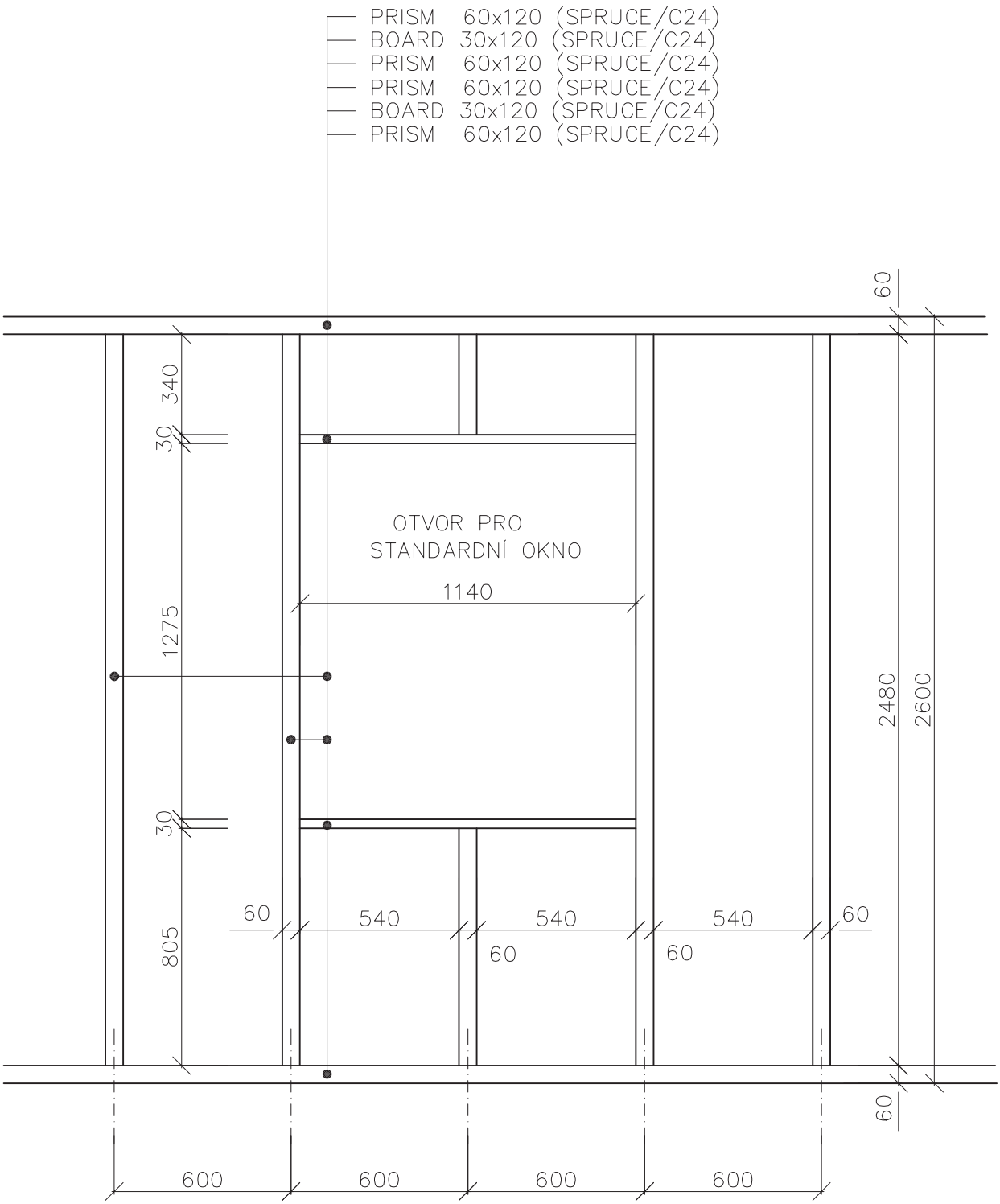

Scale applies to original 1:20	Remark: DETACHED HOUSE		Date				
	Worked out by:	Jánošík Tomáš	01/06	Alternation	Date	Signature	Index x x x x x
	Authorized by:						
RD RÝMAŘOV	Type: GABLE						
	VIEW OF THE FRAME – TH. 225/265/297						RD C 033

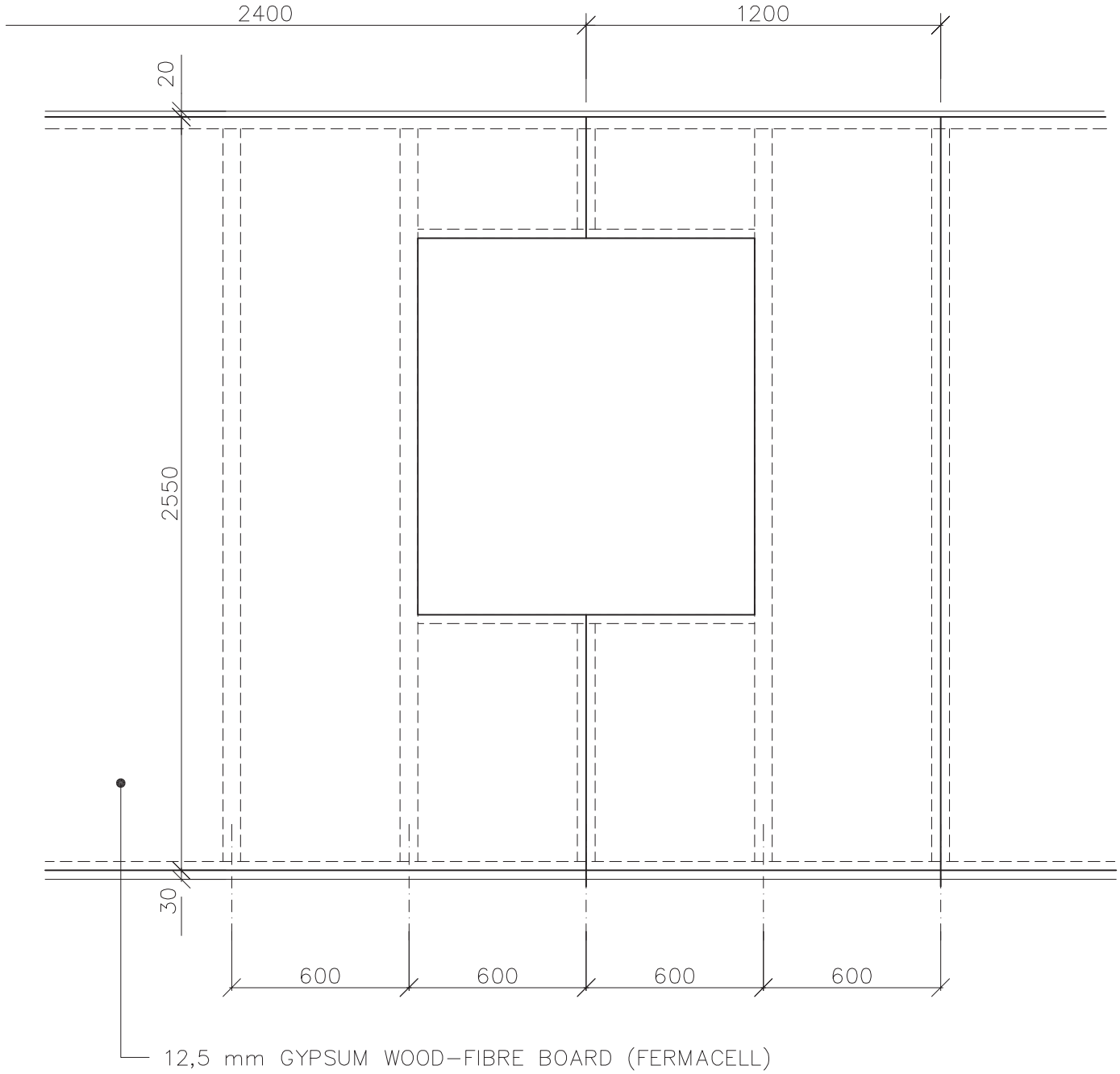

Scale applies to original 1:20	Remark: DETACHED HOUSE		Date				
	Worked out by:	Jánošík Tomáš	01/06	Alternation	Date	Signature	Index x x x x x
	Authorized by:						
RD RÝMAŘOV	Type: GABLE						
	VIEW OF THE SHEATHING – TH. 225/265/297				RD C 034		

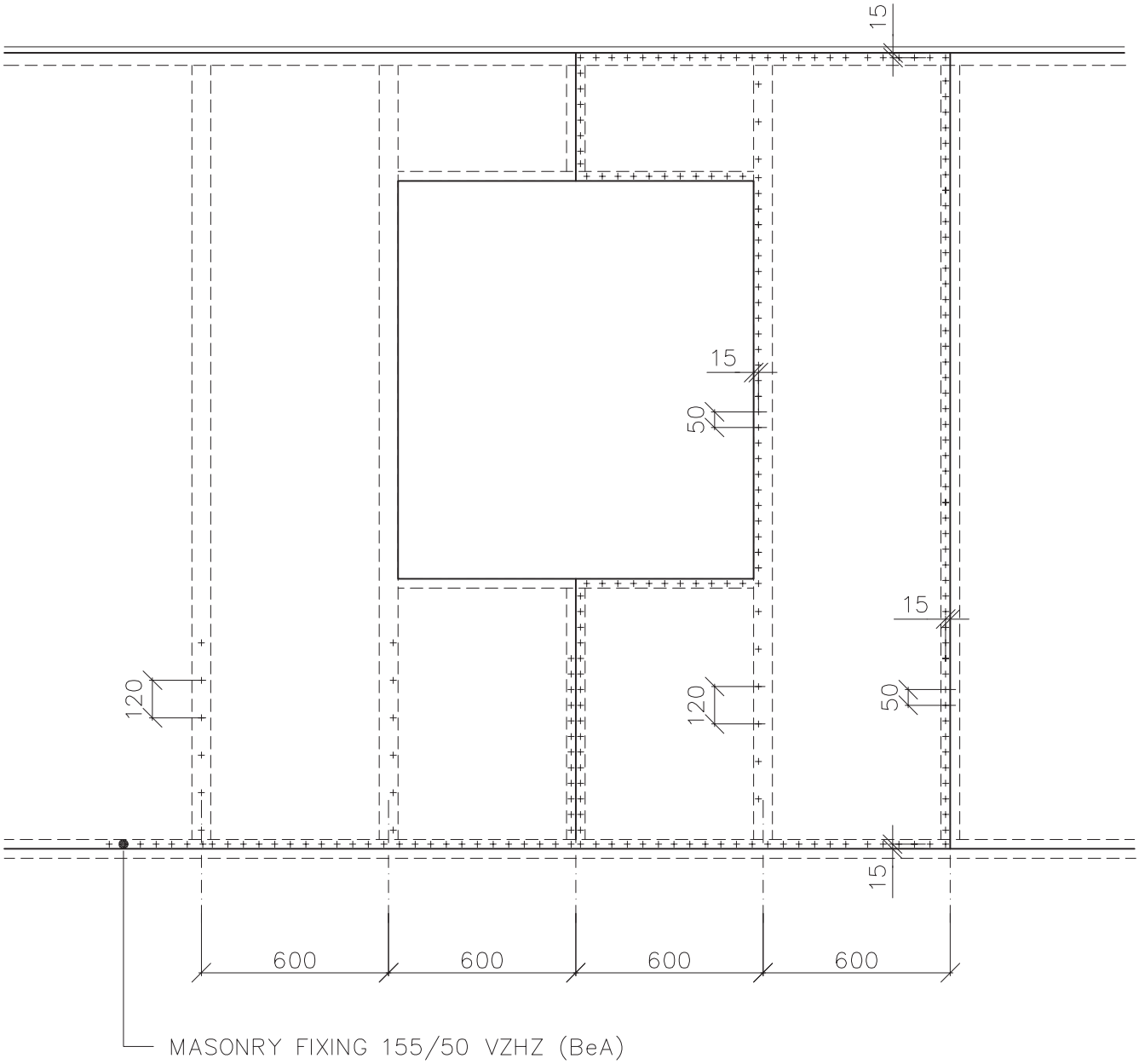

Scale applies to original 1:20	Remark: DETACHED HOUSE		Date				
	Worked out by:	Jánošík Tomáš	01/06	Alternation	Date	Signature	Index x x x x x
	Authorized by:						
	Type: GABLE						
RD RÝMAŘOV	FIXATION OF THE SHEATING ON THE FRAME – TH. 225/265/297						RD C 035

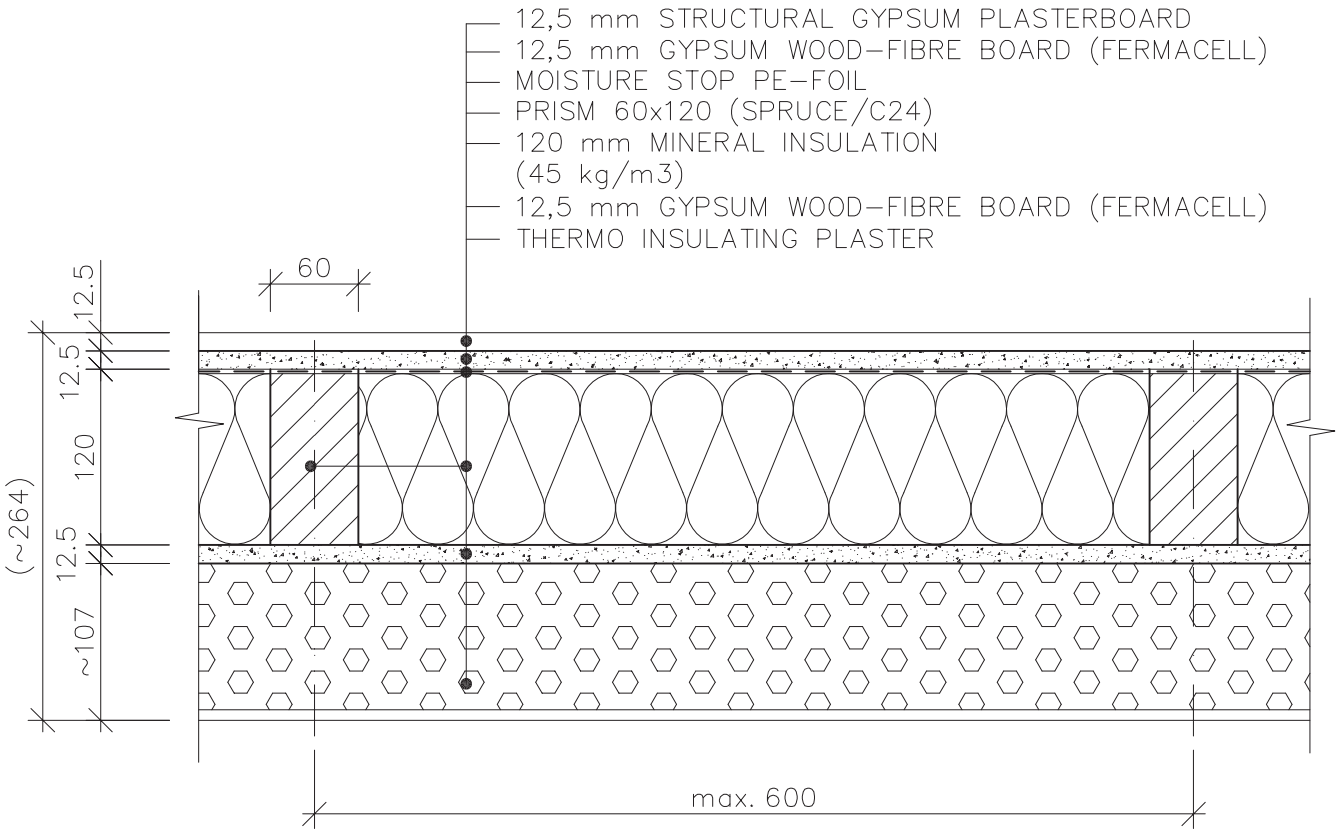

Scale applies to original 1:5	Remark: DETACHED HOUSE		Date				
	Worked out by:	Ing. Pavel Krupa	09/07	Alternation	Date	Signature	Index x
	Authorized by:	Tomáš Jánošík	09/07				x x x x
RD RÝMAŘOV	Type: GABLE						
	HORIZONTAL SECTIONAL VIEW – TH. 265						RD C 036

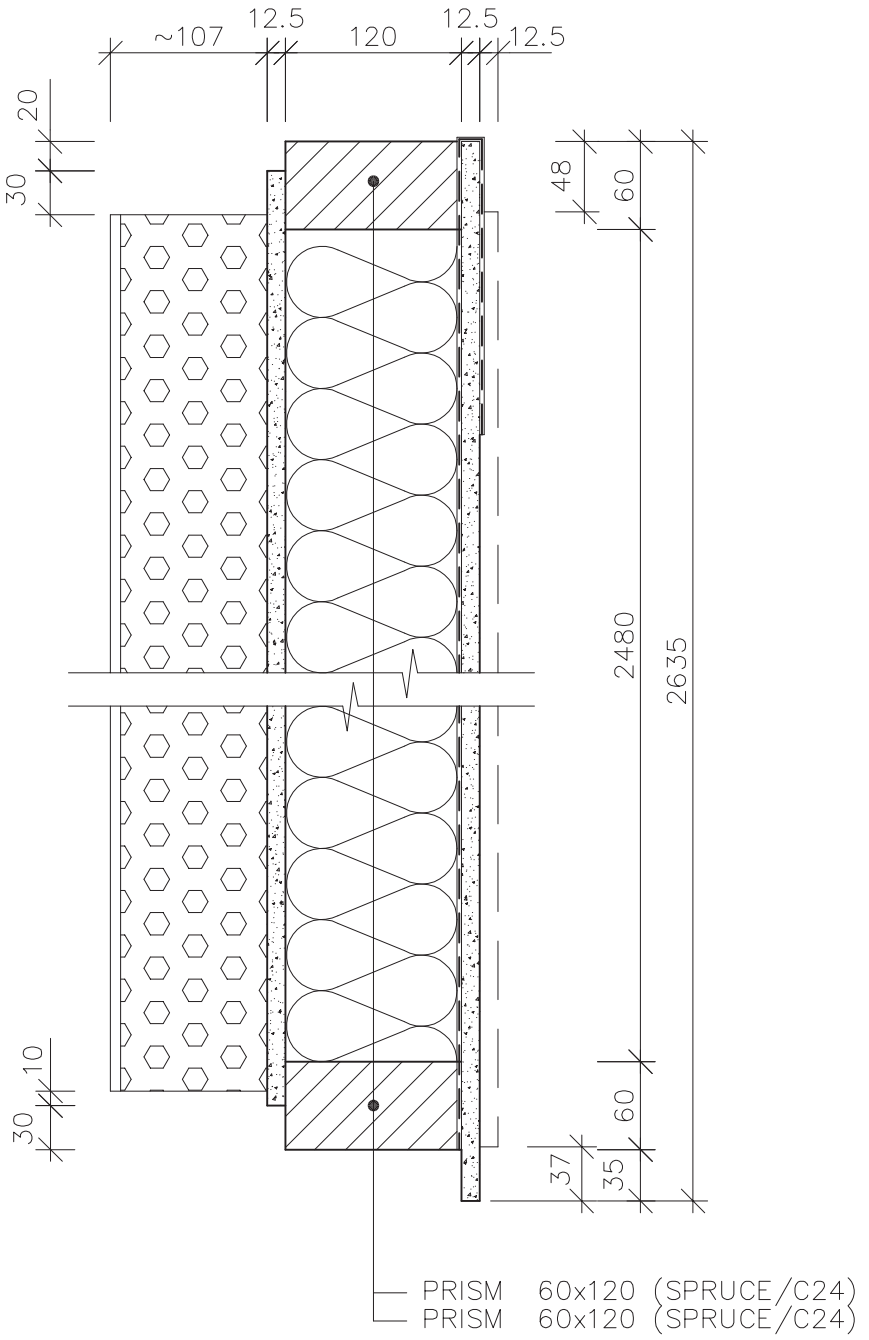

Scale applies to original 1:5	Remark: DETACHED HOUSE		Date				
	Worked out by:	Ing. Pavel Krupa	09/07	Alternation	Date	Signature	Index x x x x x
	Authorized by:	Tomáš Jánošík	09/07				
RD RÝMAŘOV	Type: GABLE						
	VERTICAL SECTIONAL VIEW – TH. 265				RD C 037		

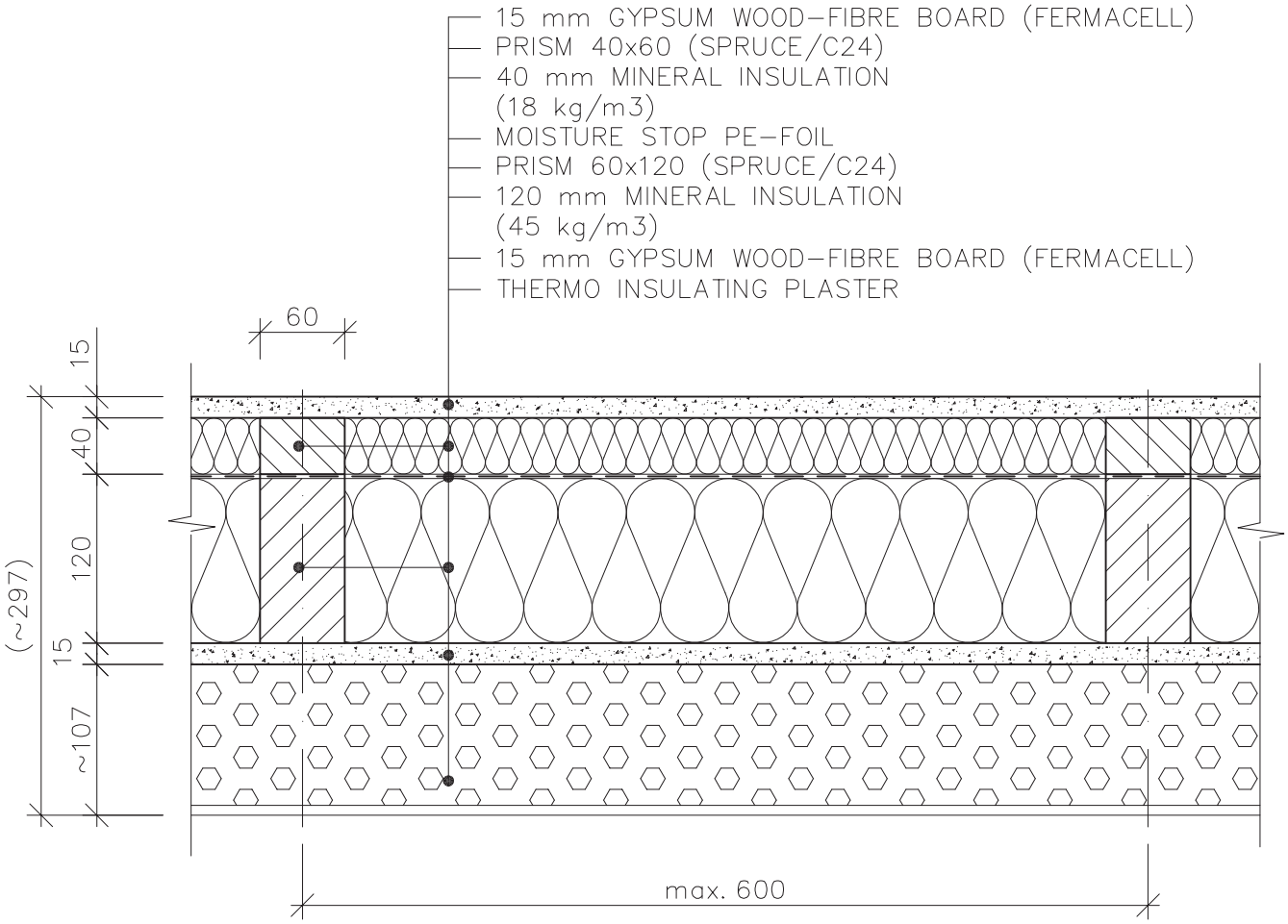

Scale applies to original 1:5	Remark: DETACHED HOUSE		Date				
	Worked out by:	Ing. Pavel Krupa	09/07	Alternation	Date	Signature	Index x
	Authorized by:	Tomáš Jánošík	09/07				x x x x
RD RÝMAŘOV	Type: GABLE						
	HORIZONTAL SECTIONAL VIEW – TH. 297						RD C 038

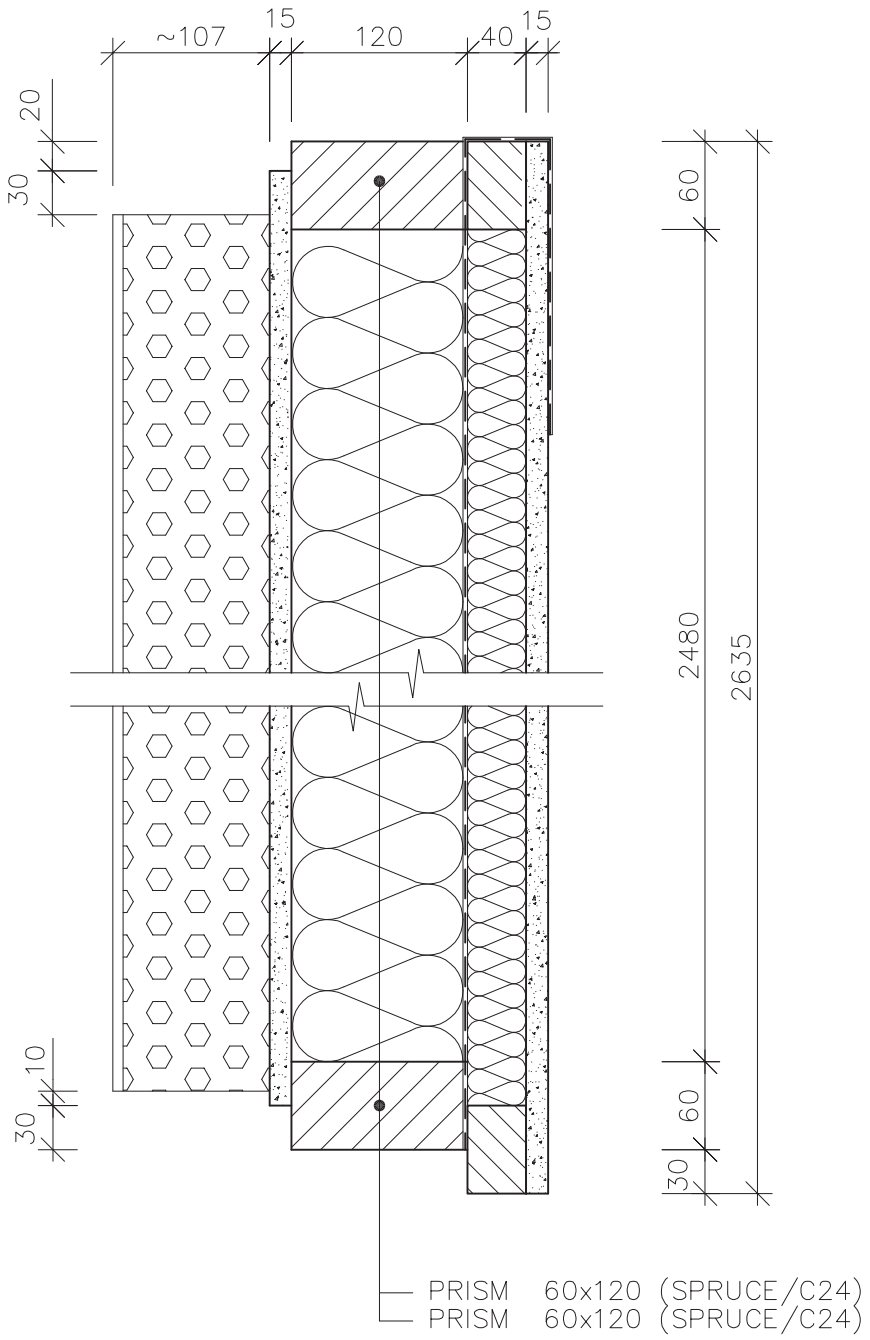

Scale applies to original 1:5	Remark: DETACHED HOUSE		Date				
	Worked out by:	Ing. Pavel Krupa	09/07	Alternation	Date	Signature	Index x x x x x
	Authorized by:	Tomáš Jánošík	09/07				
RD RÝMAŘOV	Type: GABLE						
	VERTICAL SECTIONAL VIEW – TH. 297						RD C 039

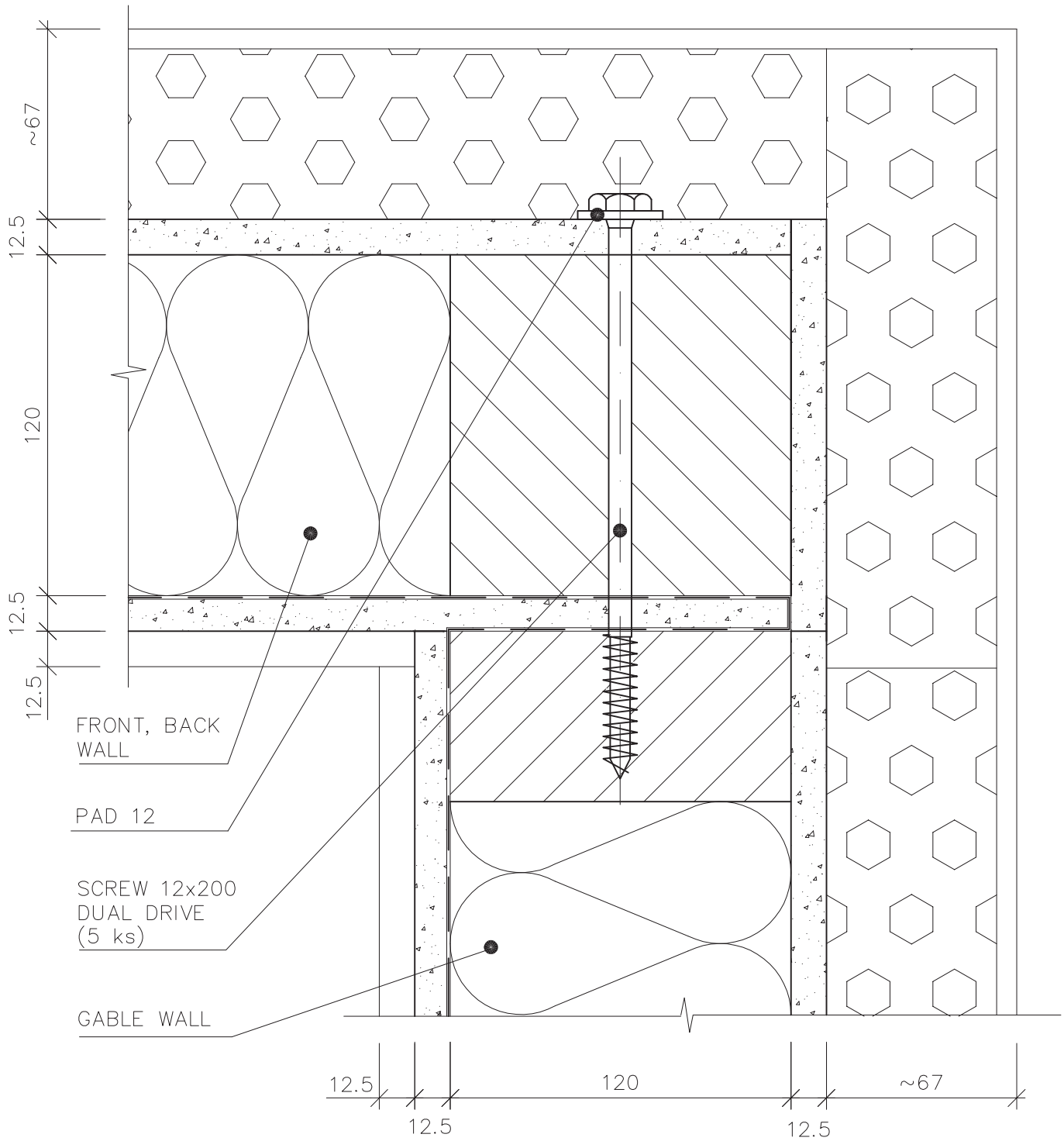

Scale applies to original 1:2	Remark: DETACHED HOUSE		Date				
	Worked out by:	Kohoutek Petr	01/06	Alternation	Date	Signature	Index x x x x x
	Authorized by:						
	Type: FRONT/BACK WALL AND GABLE WALL						
RD RÝMAŘOV	CORNER CONNECTION – TH. 225				RD C 040		

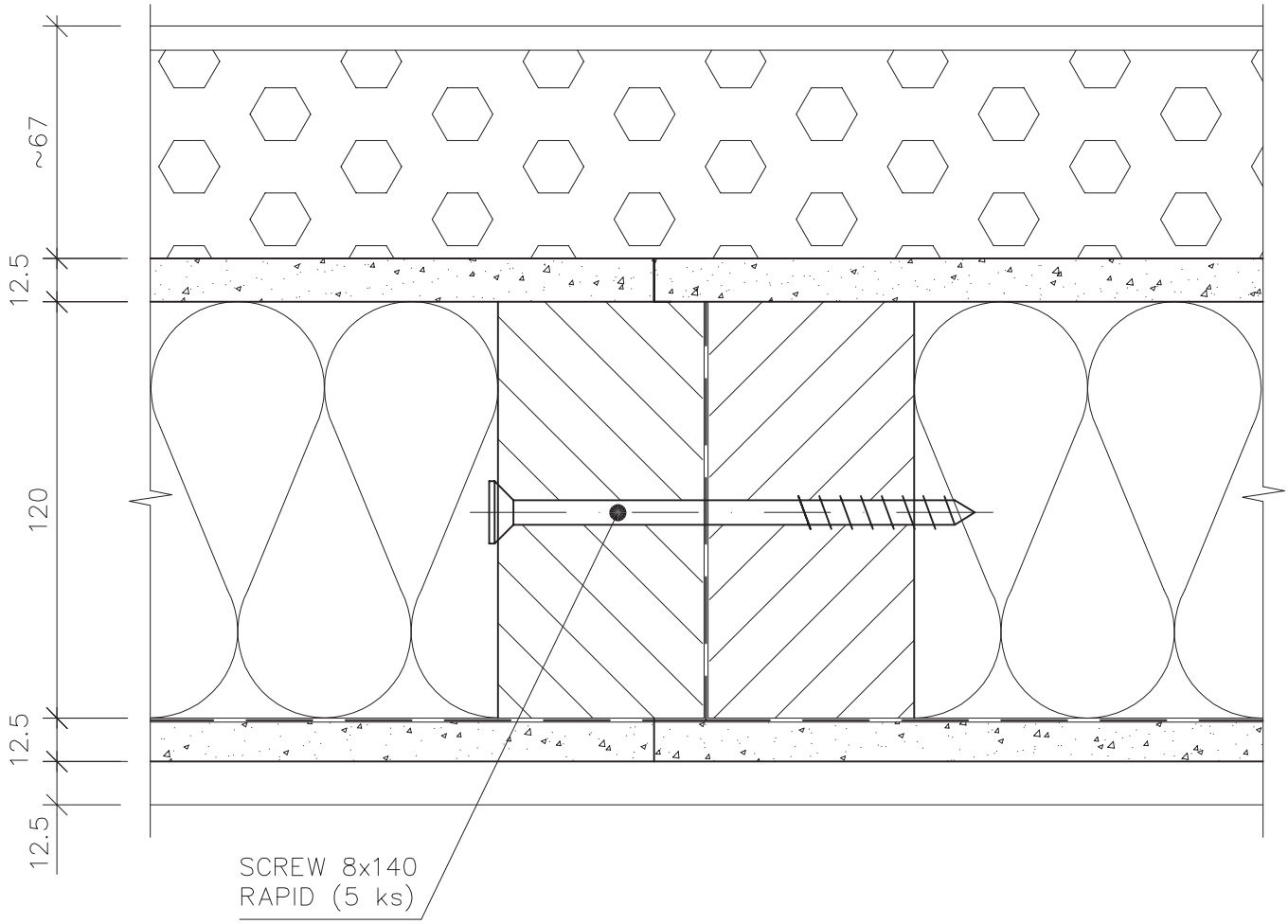

Scale applies to original 1:5	Remark: DETACHED HOUSE		Date				
	Worked out by:	Kohoutek Petr	01/06	Alternation	Date	Signature	Index x
	Authorized by:						x
							x
							x
							x
RD RÝMAŘOV	Type: FRONT, BACK WALL AND GABLE WALL						
	HORIZONTAL CONNECTION – TH. 225						RD C 041

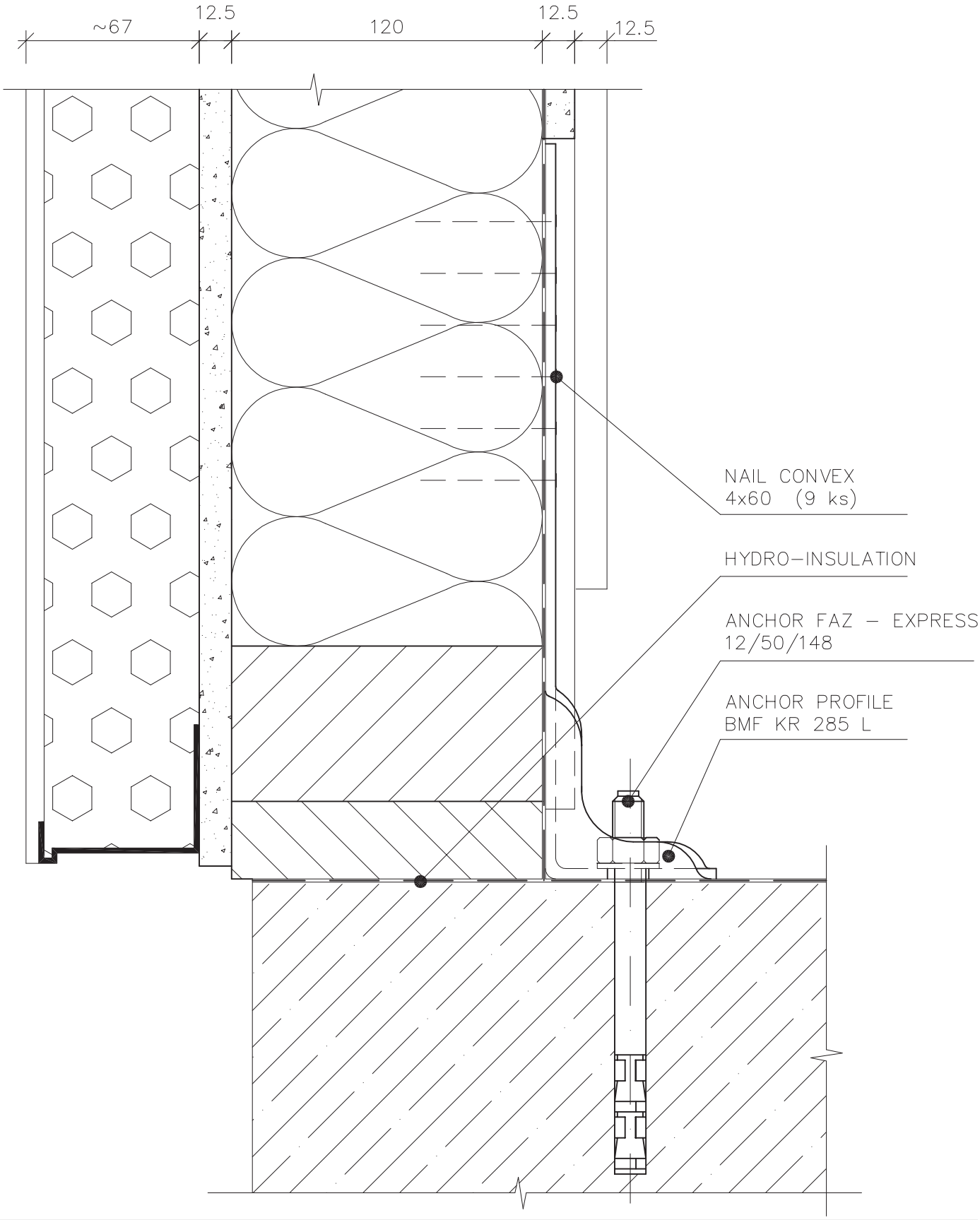

Scale applies to original 1:2	Remark: DETACHED HOUSE		Date				
	Worked out by:	Kohoutek Petr	01/06	Alternation	Date	Signature	Index
	Authorized by:						x x x x x
RD RÝMAŘOV	Type: FRONT, BACK WALL AND GABLE WALL						
	ANCHORING ON THE GROUNDWORK						RD C 042

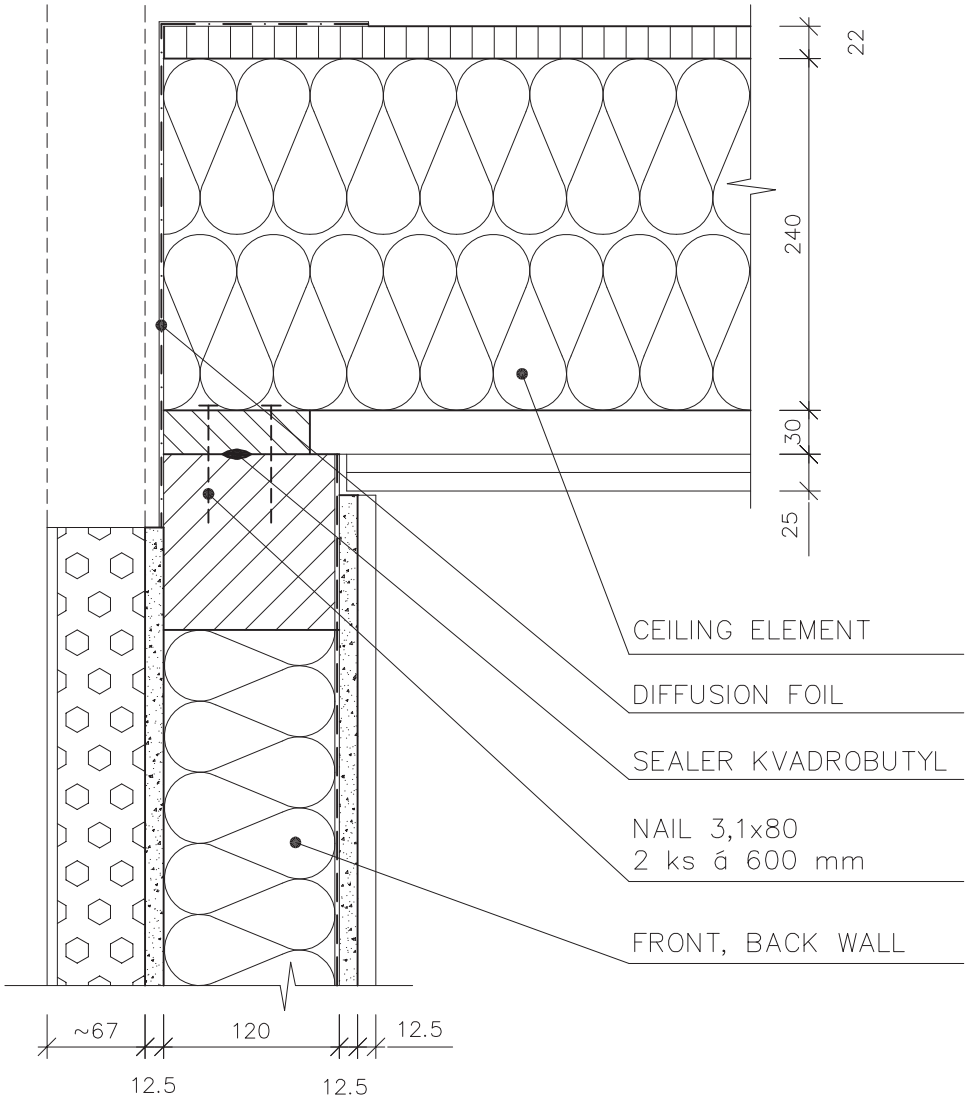

Scale applies to original 1:5	Remark: DETACHED HOUSE		Date				
	Worked out by:	Kohoutek Petr	01/06	Alternation	Date	Signature	Index x x x x x
	Authorized by:						
	Type: FRONT, BACK WALL						
RD RÝMAŘOV	CONNETION WITH THE CEILING ELEMENT					RD C 043	

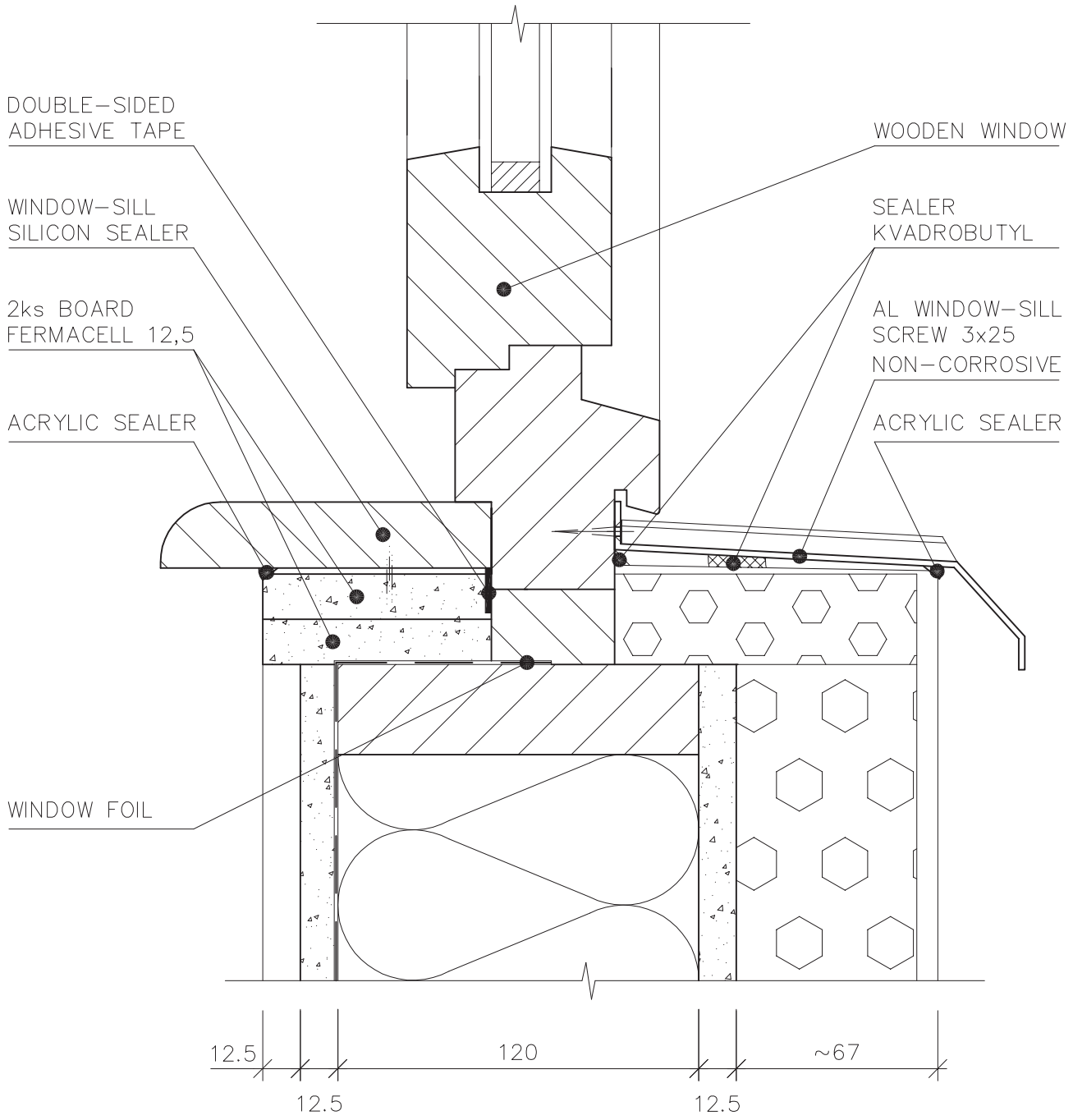

Scale applies to original 1:2	Remark: DETACHED HOUSE		Date				
	Worked out by:	Jánošík Tomáš	01/06	Alternation	Date	Signature	Index x x x x x
	Authorized by:						
RD RÝMAŘOV	Type: VERTICAL SECTIONAL VIEW OF THE PARAPET				RD C 044		

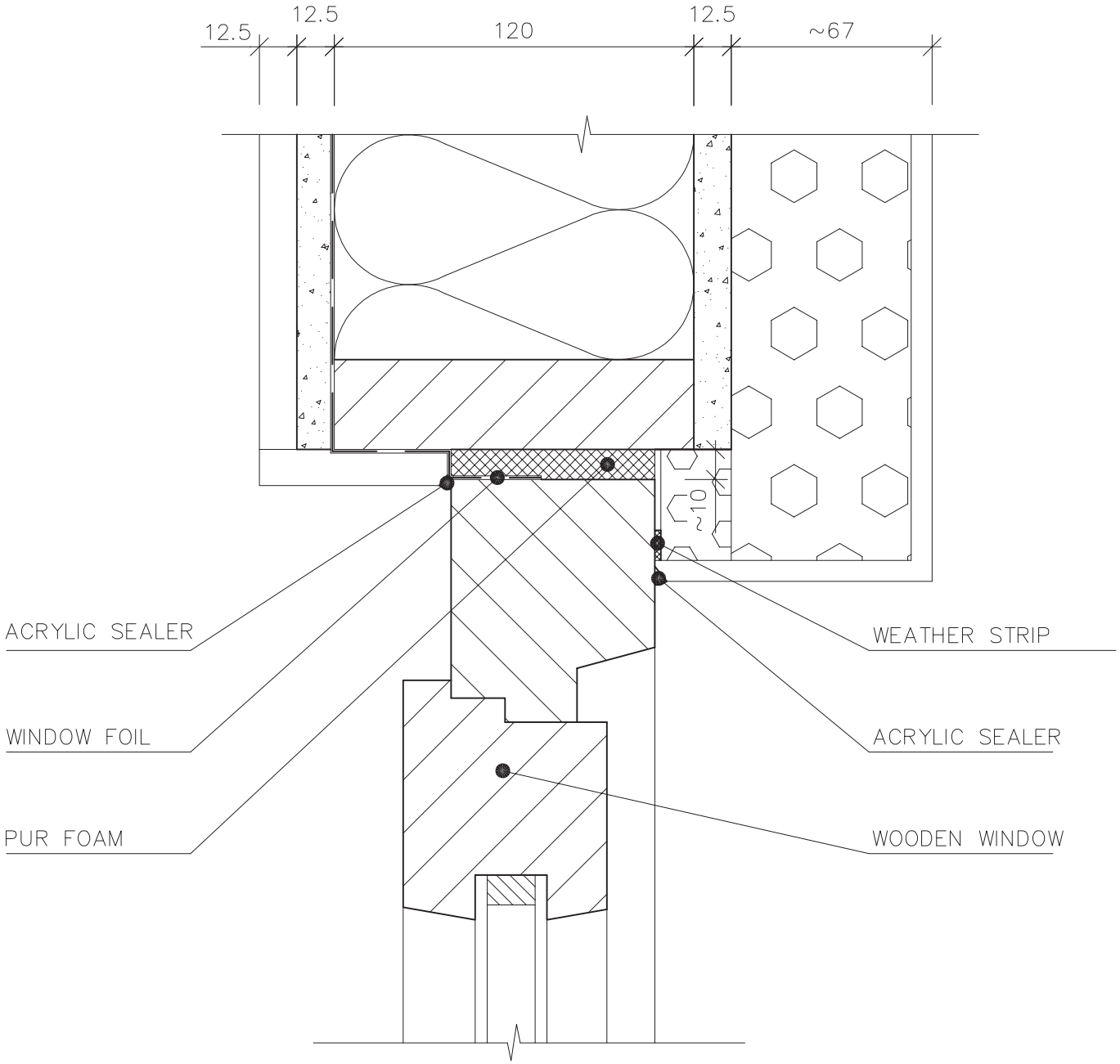

Scale applies to original 1:2	Remark: DETACHED HOUSE		Date				
	Worked out by:	Jánošík Tomáš	01/06	Alternation	Date	Signature	Index x x x x x
	Authorized by:						
RD RÝMAŘOV	Type: VERTICAL SECTIONAL VIEW OF THE WINDOW HEAD				RD C 045		

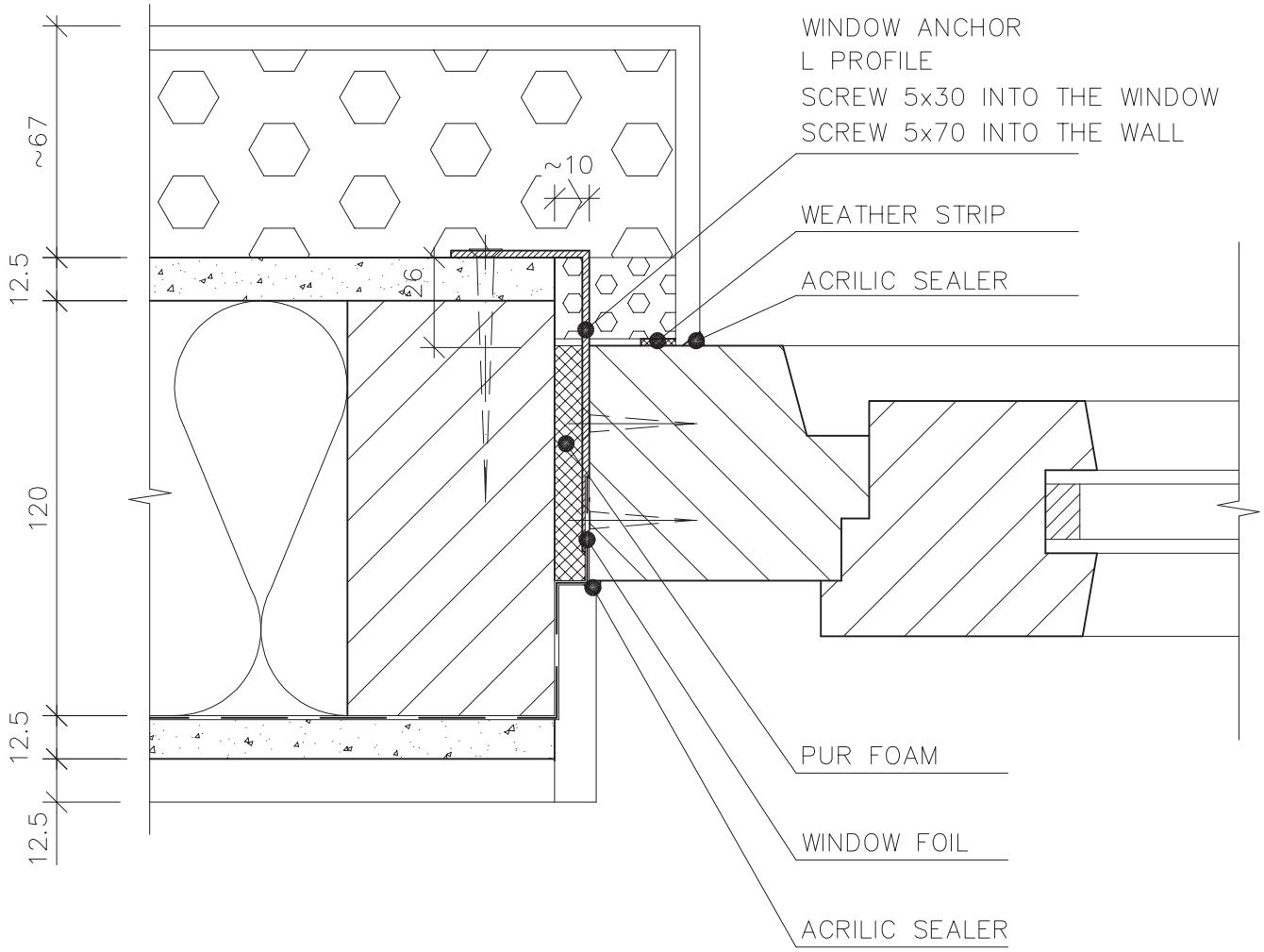

Scale applies to original 1:2	Remark: DETACHED HOUSE		Date				
	Worked out by:	Jánošík Tomáš	01/06	Alternation	Date	Signature	Index x x x x x
	Authorized by:						
RD RÝMAŘOV	Type: HORIZONTAL SECTIONAL VIEW OF THE WINDOW LINING				RD C 046		

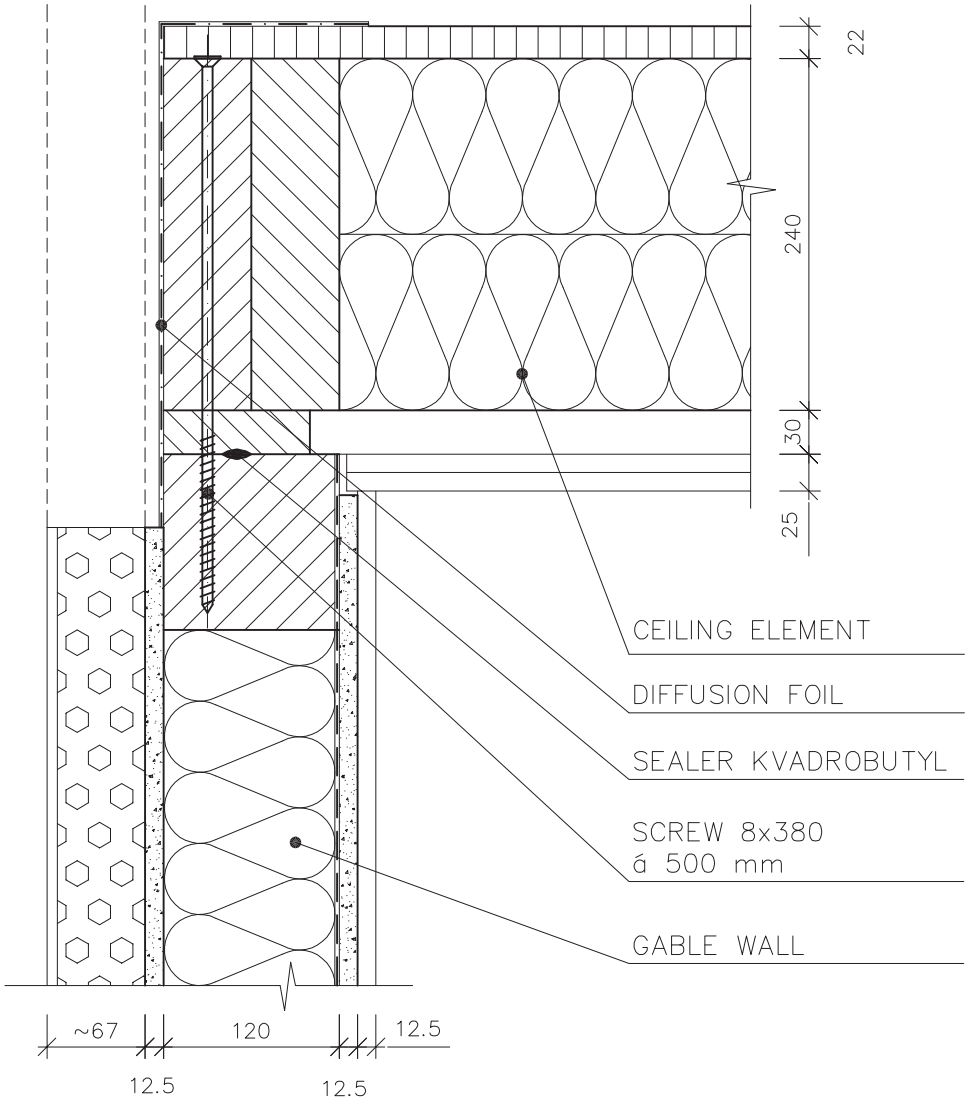

Scale applies to original 1:5	Remark: DETACHED HOUSE		Date				
	Worked out by:	Jánošík Tomáš	01/06	Alternation	Date	Signature	Index x x x x x
	Authorized by:						
	Type: GABLE WALL						
RD RÝMAŘOV	CONNETION WITH THE CEILING ELEMENT				RD C 047		

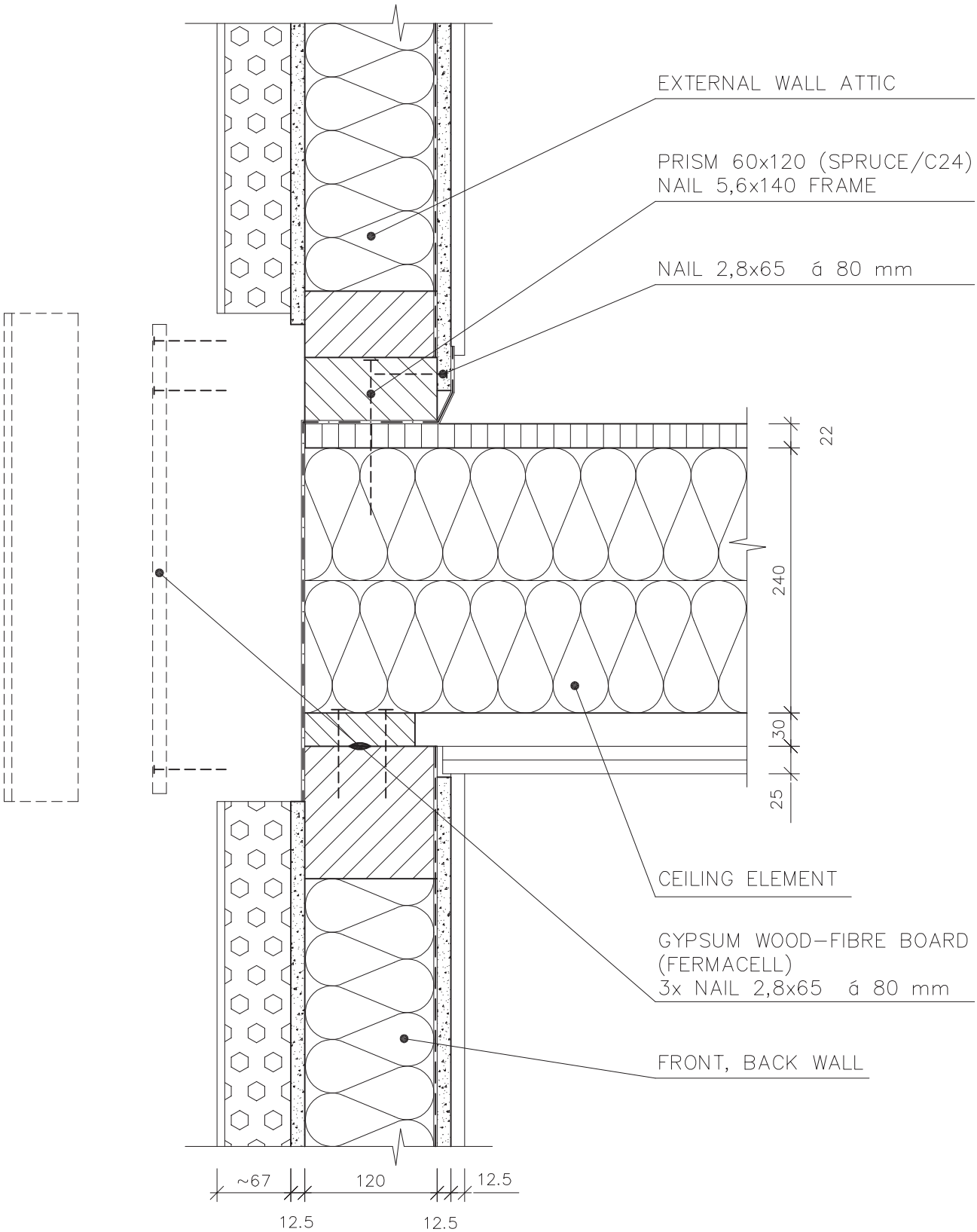

Scale applies to original 1:5	Remark: DETACHED HOUSE		Date				
	Worked out by:	Jánošík Tomáš	01/06	Alternation	Date	Signature	Index x x x x x
	Authorized by:						
RD RÝMAŘOV	Type: EXTERNAL WALL ATTIC						
	CONNETION WITH THE CEILING ELEMENT						RD C 048

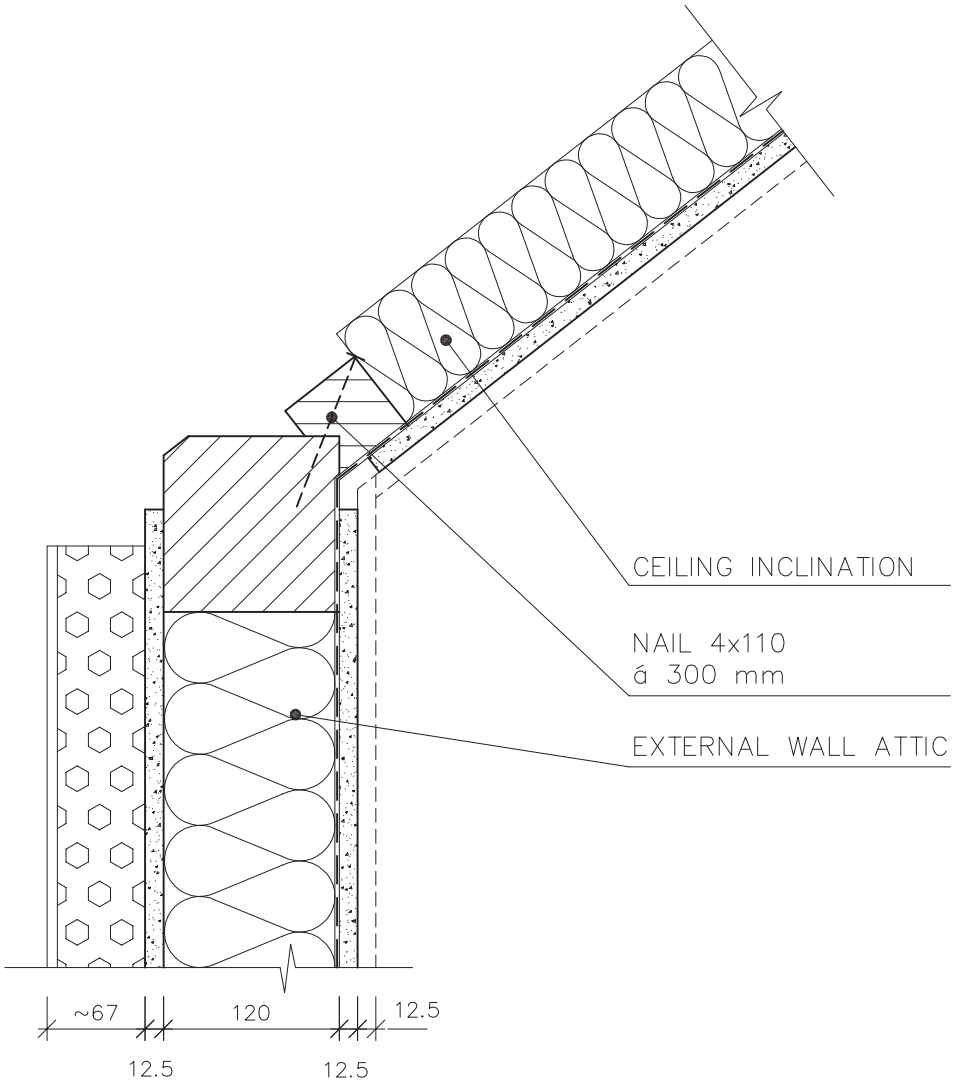

Scale applies to original 1:5	Remark: DETACHED HOUSE – FOR INCLIN. 38°		Date				
	Worked out by:	Jánošík Tomáš	01/06	Alternation	Date	Signature	Index x x x x x
	Authorized by:						
RD RÝMAŘOV	Type: EXTERNAL WALL ATTIC						
	CONNETION WITH THE CEILING INCLINATION						RD C 049

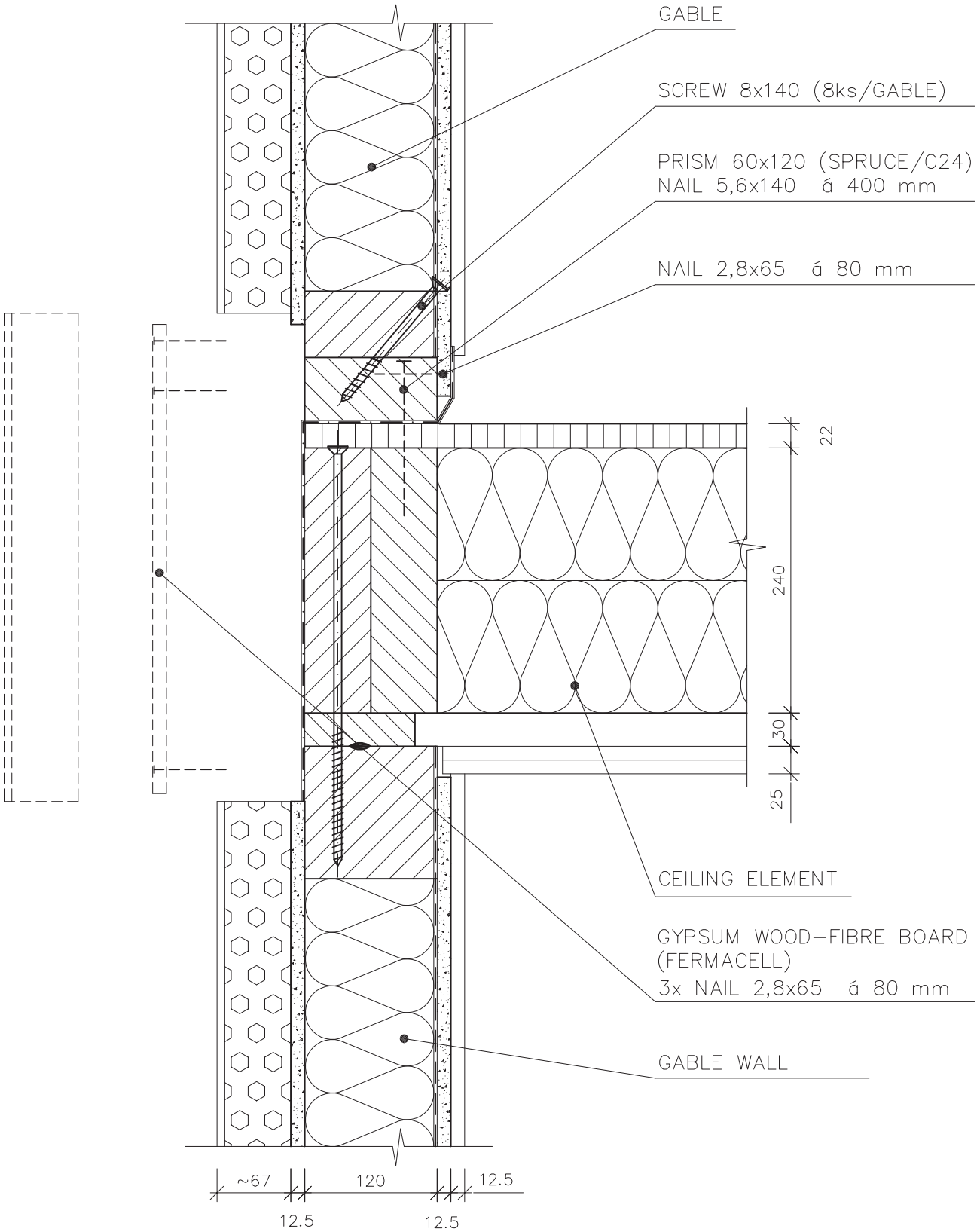

Scale applies to original 1:5	Remark: DETACHED HOUSE		Date				
	Worked out by:	Jánošík Tomáš	01/06	Alternation	Date	Signature	Index x x x x x
	Authorized by:						
RD RÝMAŘOV	Type: GABLE						
	CONNETION WITH THE CEILING ELEMENT				RD C 050		

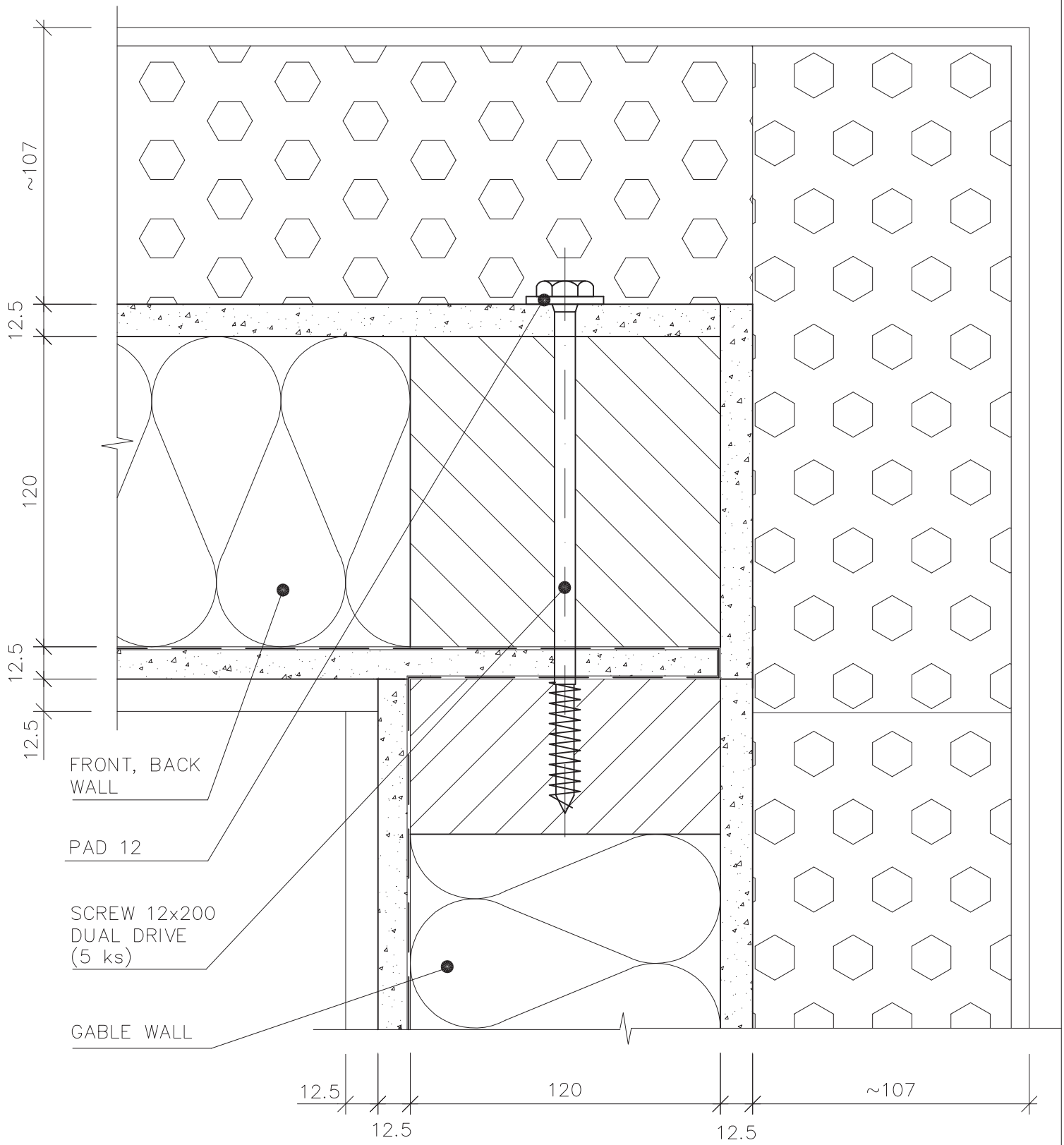

Scale applies to original 1:2	Remark: DETACHED HOUSE		Date				
	Worked out by:	Ing. Pavel Krupa	09/07	Alternation	Date	Signature	Index x
	Authorized by:	Tomáš Jánošík	09/07				x x x x

RD RÝMAŘOV

Type: FRONT/BACK WALL AND GABLE WALL

CORNER CONNECTION – TH. 265

RD C 060

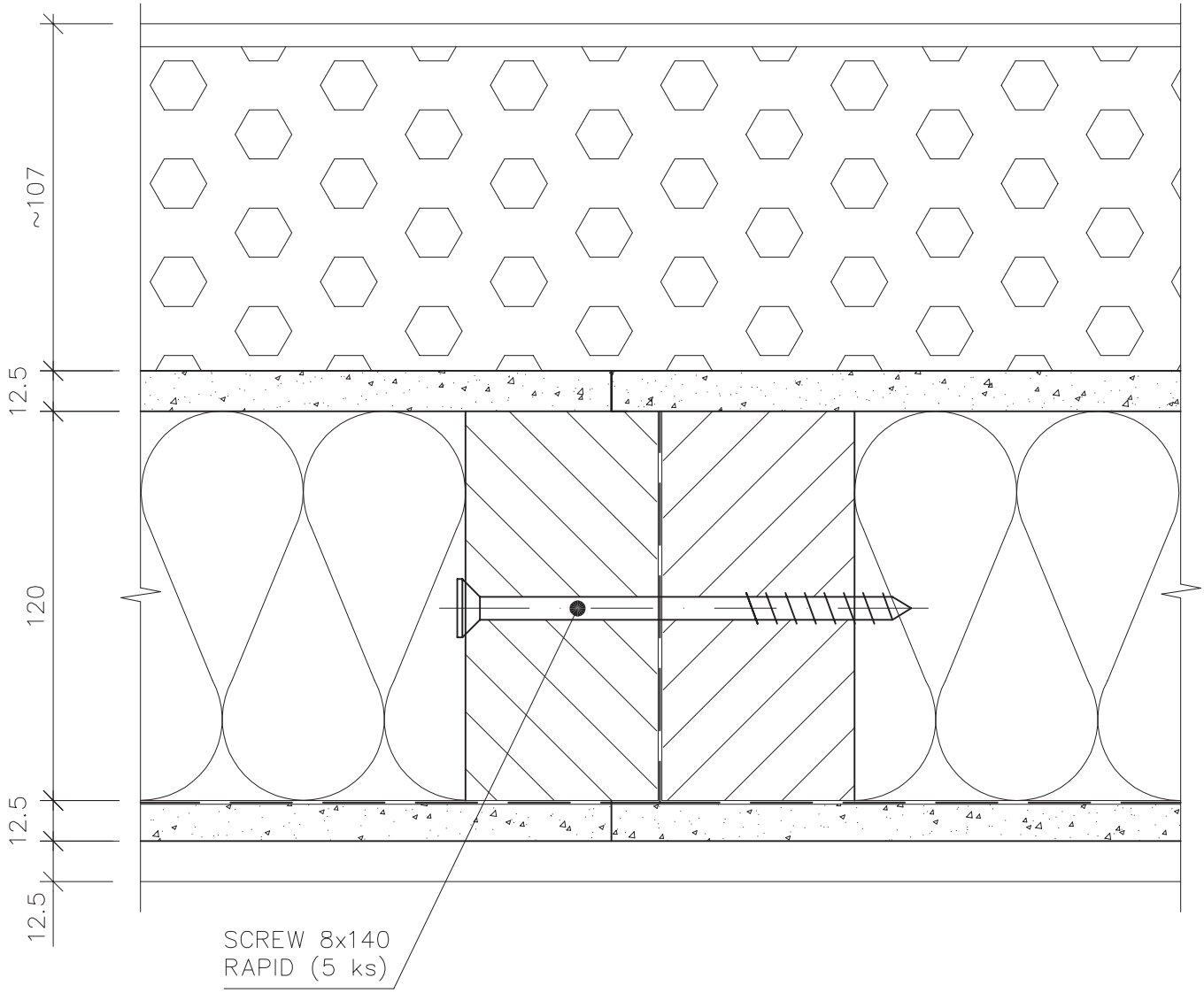

Scale applies to original 1:5	Remark: DETACHED HOUSE		Date				
	Worked out by:	Ing. Pavel Krupa	09/07	Alternation	Date	Signature	Index x
	Authorized by:	Tomáš Jánošík	09/07				x
							x
							x
							x
RD RÝMAŘOV	Type: FRONT, BACK WALL AND GABLE WALL						
	HORIZONTAL CONNECTION – TH. 265					RD C 061	

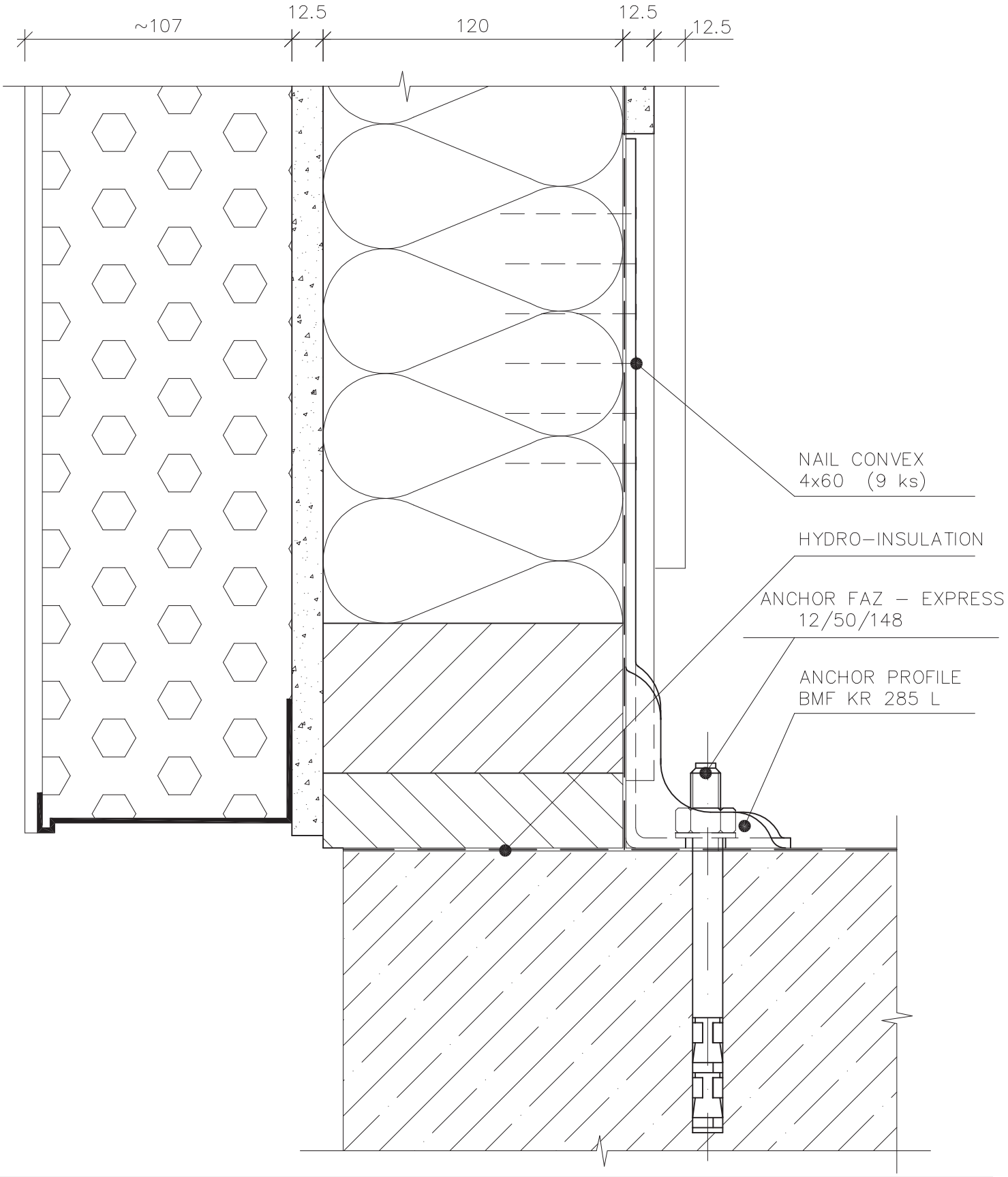

Scale applies to original 1:2	Remark: DETACHED HOUSE		Date				
	Worked out by:	Ing. Pavel Krupa	09/07	Alternation	Date	Signature	Index x
	Authorized by:	Tomáš Jánošík	09/07				x x x x
RD RÝMAŘOV	Type: FRONT, BACK WALL AND GABLE WALL						
	ANCHORING ON THE GROUNDWORK						RD C 062

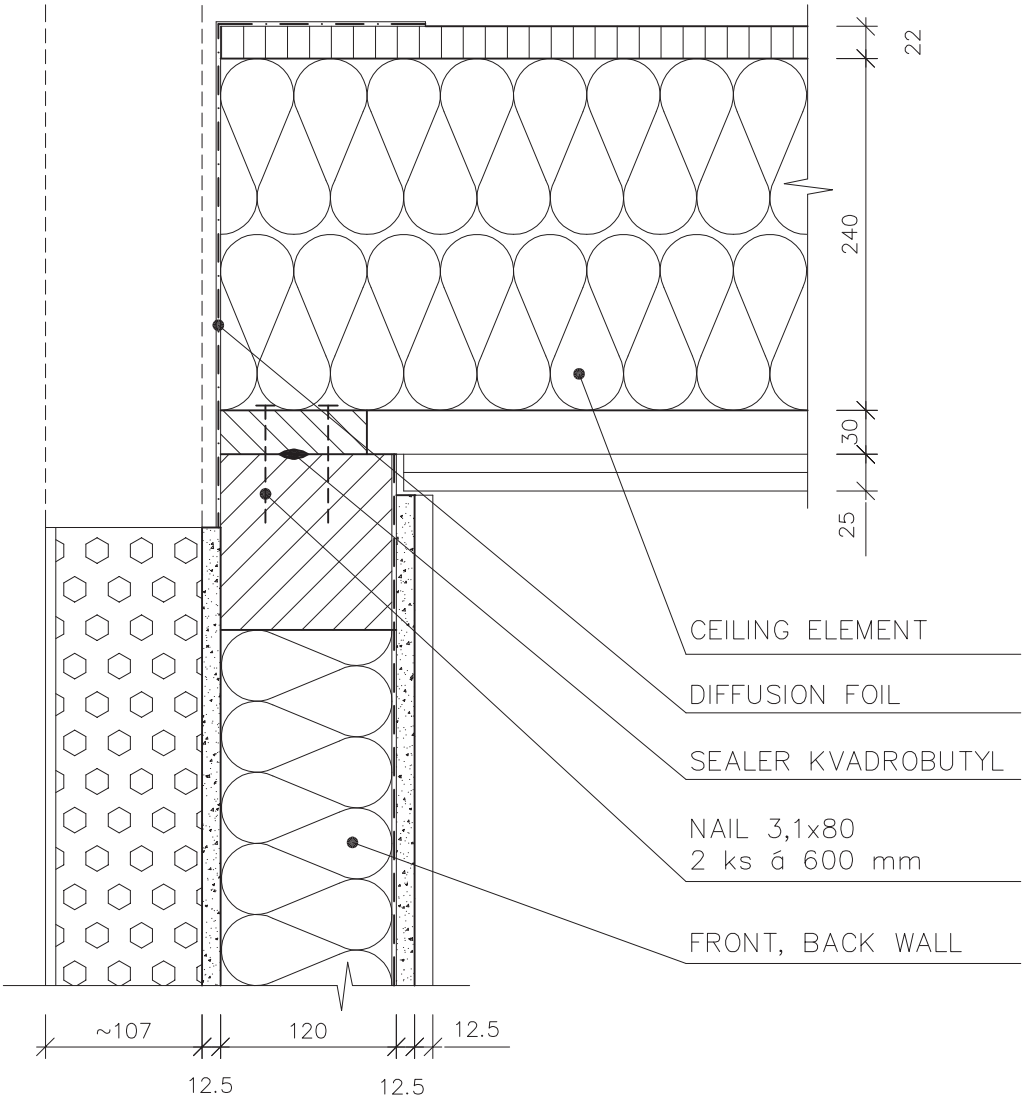

Scale applies to original 1:5	Remark: DETACHED HOUSE		Date				
	Worked out by:	Ing. Pavel Krupa	09/07	Alternation	Date	Signature	Index x x x x x
	Authorized by:	Tomáš Jánošík	09/07				
RD RÝMAŘOV	Type: FRONT, BACK WALL						
	CONNETION WITH THE CEILING ELEMENT					RD C 063	

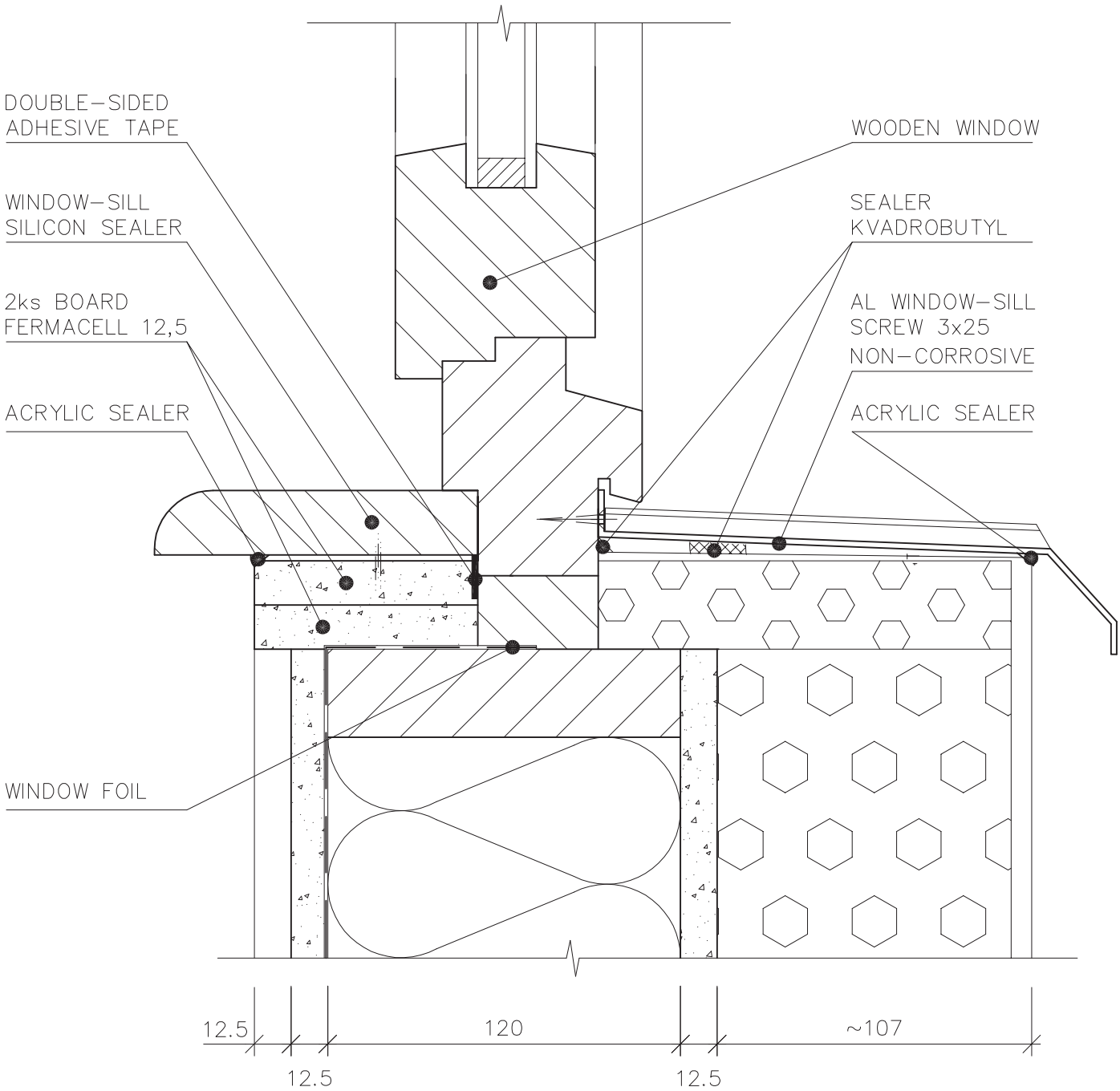

Scale applies to original 1:2	Remark: DETACHED HOUSE		Date				
	Worked out by:	Ing. Pavel Krupa	09/07	Alternation	Date	Signature	Index x
	Authorized by:	Tomáš Jánošík	09/07				x x x x
RD RÝMAŘOV	Type: VERTICAL SECTIONAL VIEW OF THE PARAPET						RD C 064

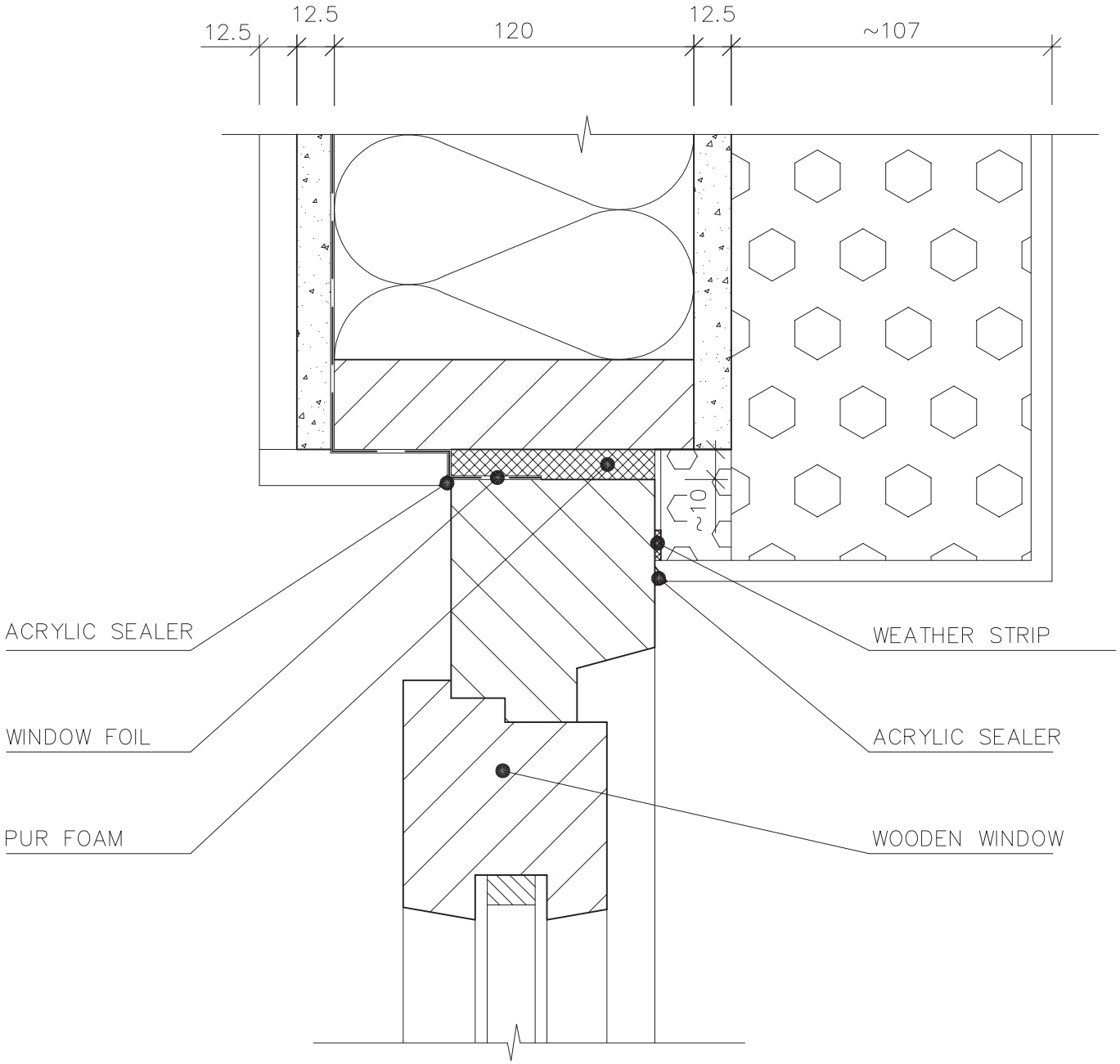

Scale applies to original 1:2	Remark: DETACHED HOUSE		Date				
	Worked out by:	Ing. Pavel Krupa	09/07	Alternation	Date	Signature	Index x
	Authorized by:	Tomáš Jánošík	09/07				x x x x
RD RÝMAŘOV	Type: VERTICAL SECTIONAL VIEW OF THE WINDOW HEAD						RD C 065

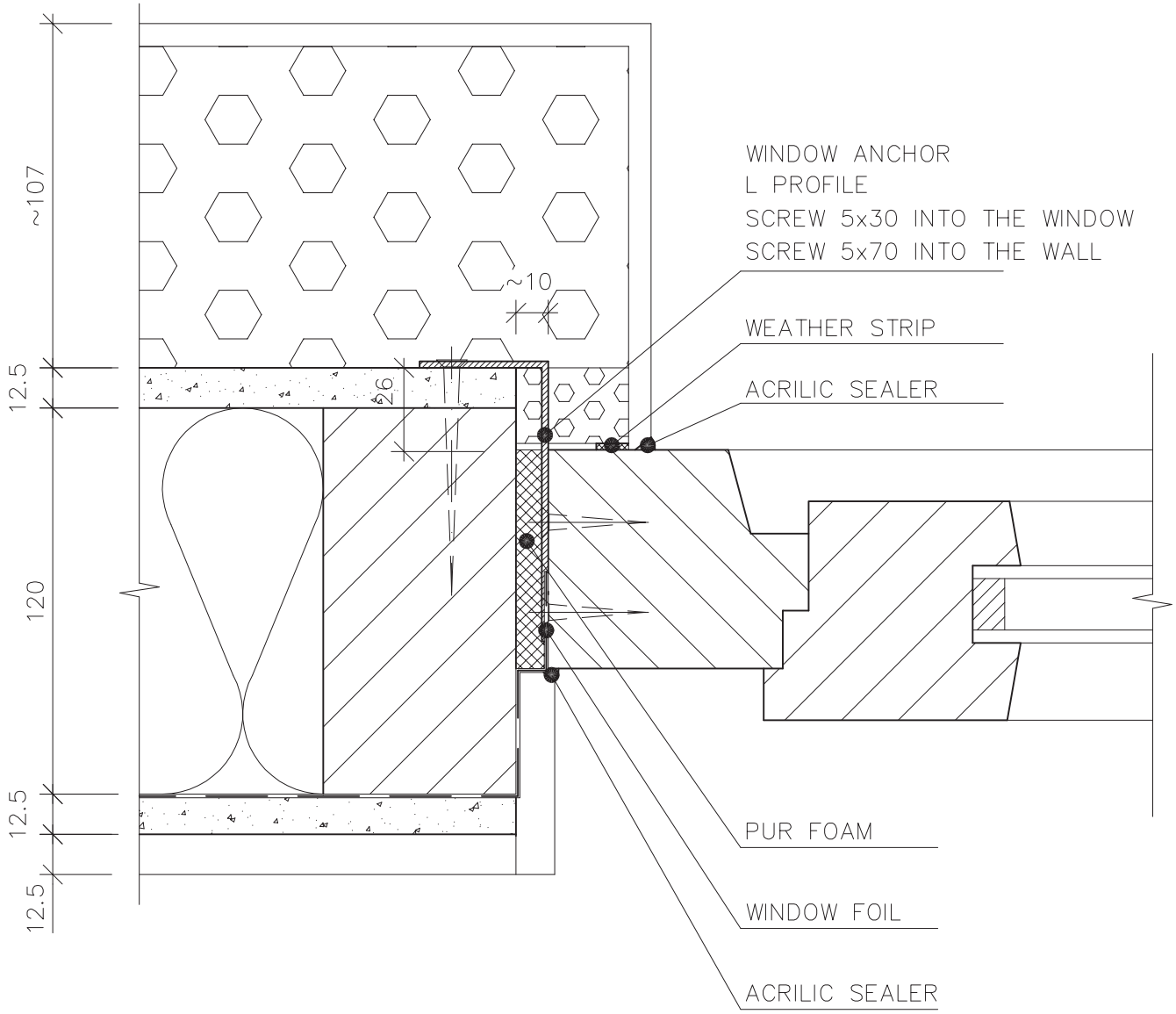

Scale applies to original 1:2	Remark: DETACHED HOUSE		Date				
	Worked out by:	Jánošík Tomáš	09/07	Alternation	Date	Signature	Index x x x x x
	Authorized by:						
RD RÝMAŘOV	Type: HORIZONTAL SECTIONAL VIEW OF THE WINDOW LINING				RD C 066		

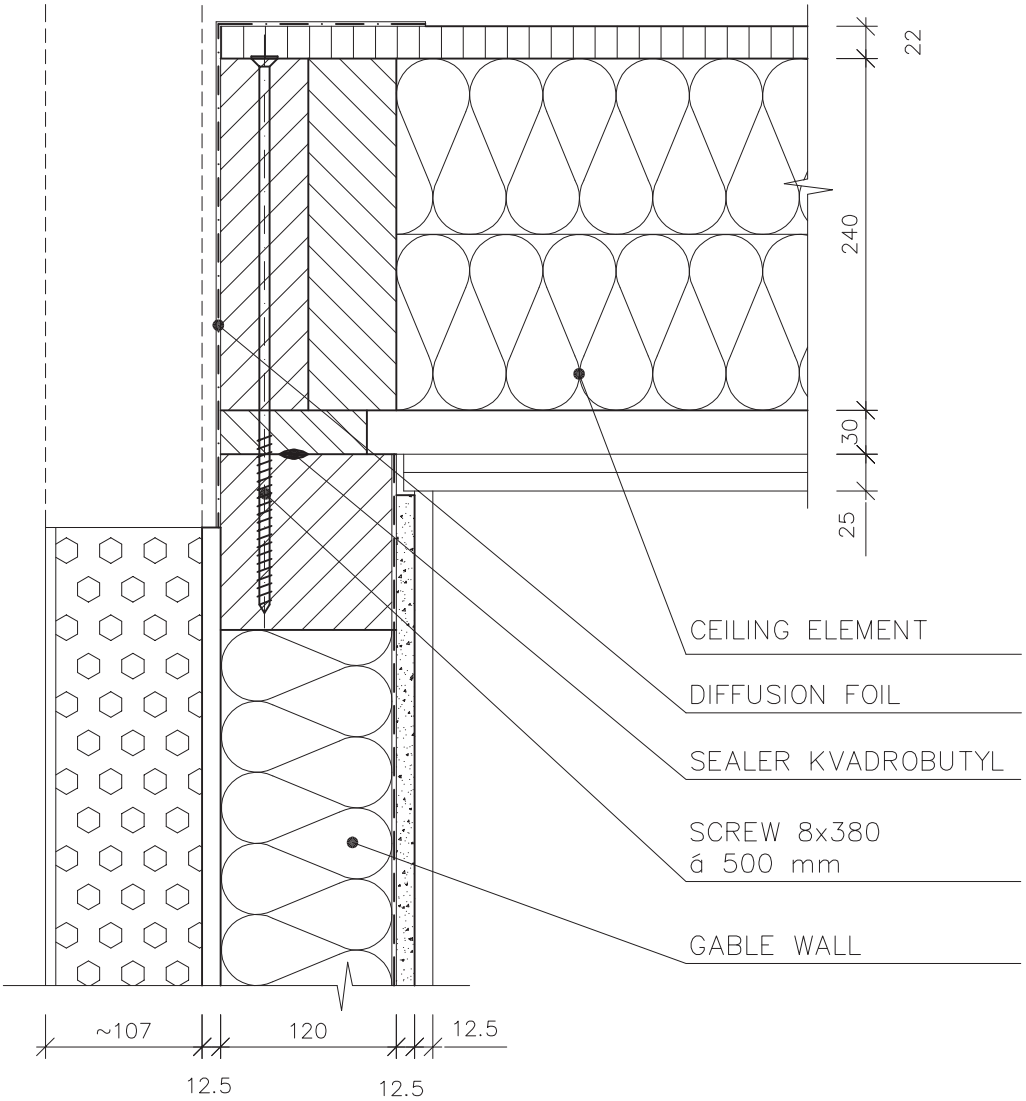

Scale applies to original 1:5	Remark: DETACHED HOUSE		Date				
	Worked out by:	Ing. Pavel Krupa	09/07	Alternation	Date	Signature	Index x x x x x
	Authorized by:	Tomáš Jánošík	09/07				
RD RÝMAŘOV	Type: GABLE WALL						
	CONNETION WITH THE CEILING ELEMENT				RD C 067		

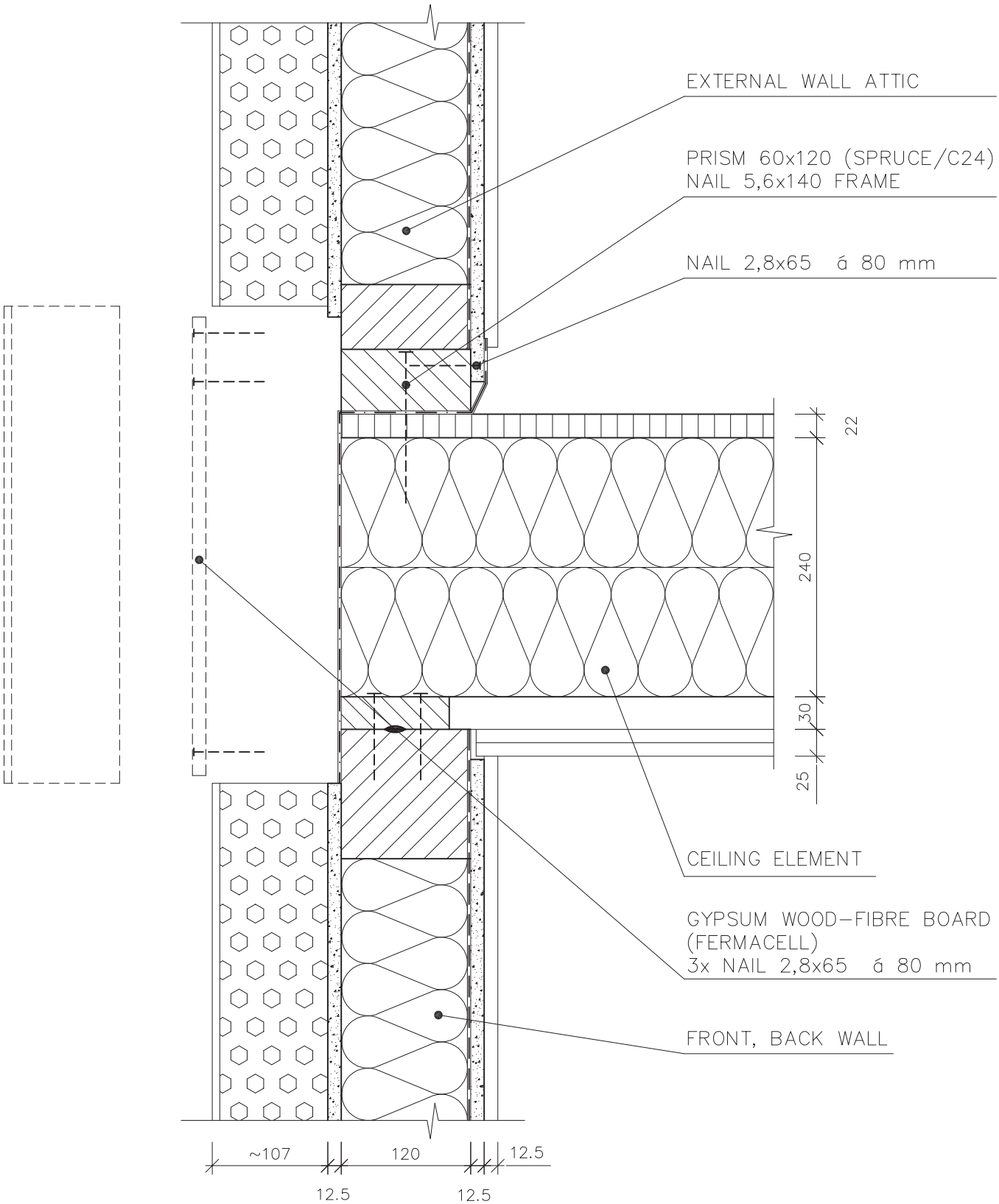

Scale applies to original 1:5	Remark: DETACHED HOUSE		Date				
	Worked out by:	Ing. Pavel Krupa	09/07	Alternation	Date	Signature	Index x x x x x
	Authorized by:	Tomáš Jánošík	09/07				
RD RÝMAŘOV	Type: EXTERNAL WALL ATTIC						
	CONNETION WITH THE CEILING ELEMENT						RD C 068

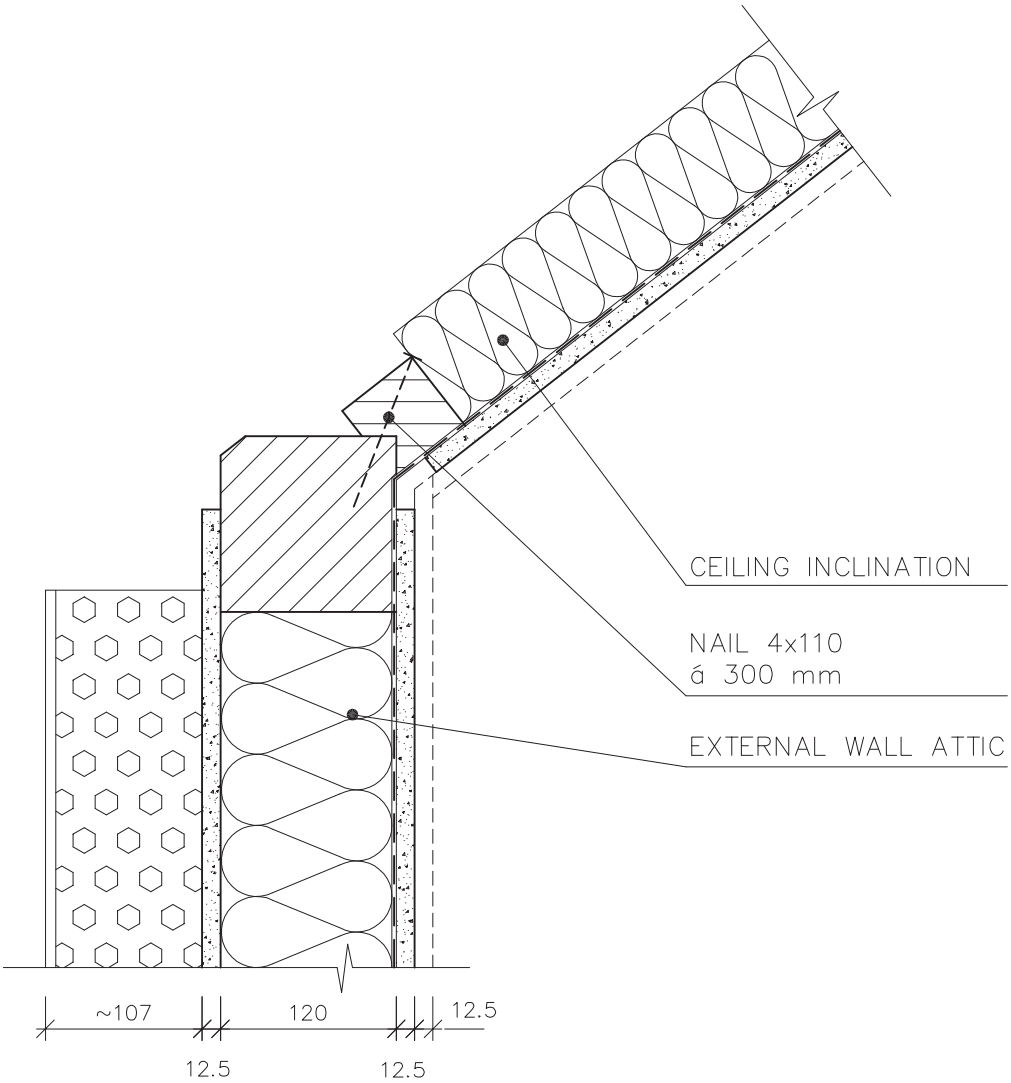

Scale applies to original 1:5	Remark: DETACHED HOUSE – FOR INCLIN. 38°		Date				
	Worked out by:	Ing. Pavel Krupa	09/07	Alternation	Date	Signature	Index
	Authorized by:	Tomáš Jánošík	09/07				x x x x x
RD RÝMAŘOV	Type: EXTERNAL WALL ATTIC						
	CONNETION WITH THE CEILING INCLINATION					RD C 069	

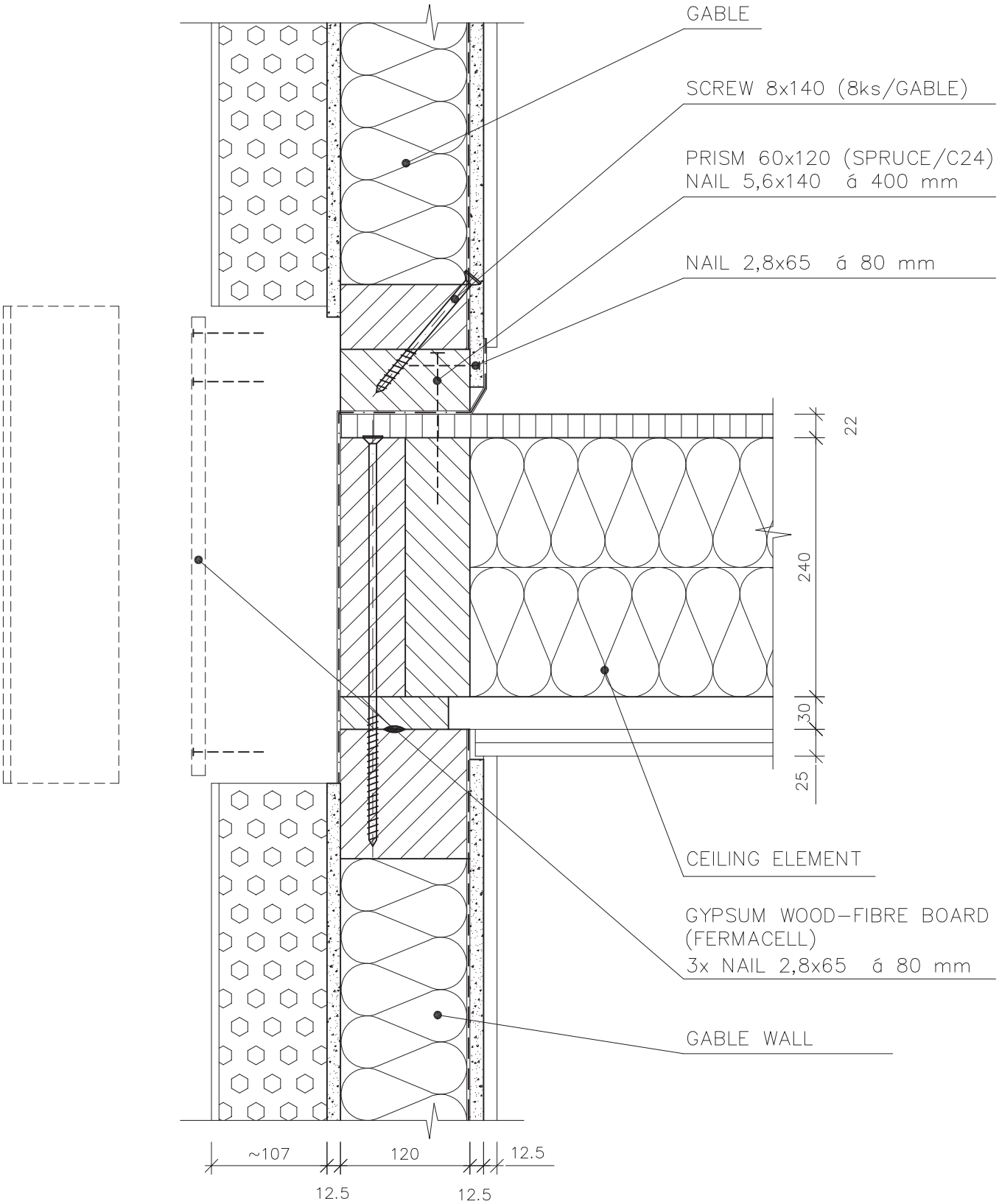

Scale applies to original 1:5	Remark: DETACHED HOUSE		Date				
	Worked out by:	Ing. Pavel Krupa	09/07	Alternation	Date	Signature	Index x x x x x
	Authorized by:	Tomáš Jánošík	09/07				
RD RÝMAŘOV	Type: GABLE						
	CONNETION WITH THE CEILING ELEMENT						RD C 070

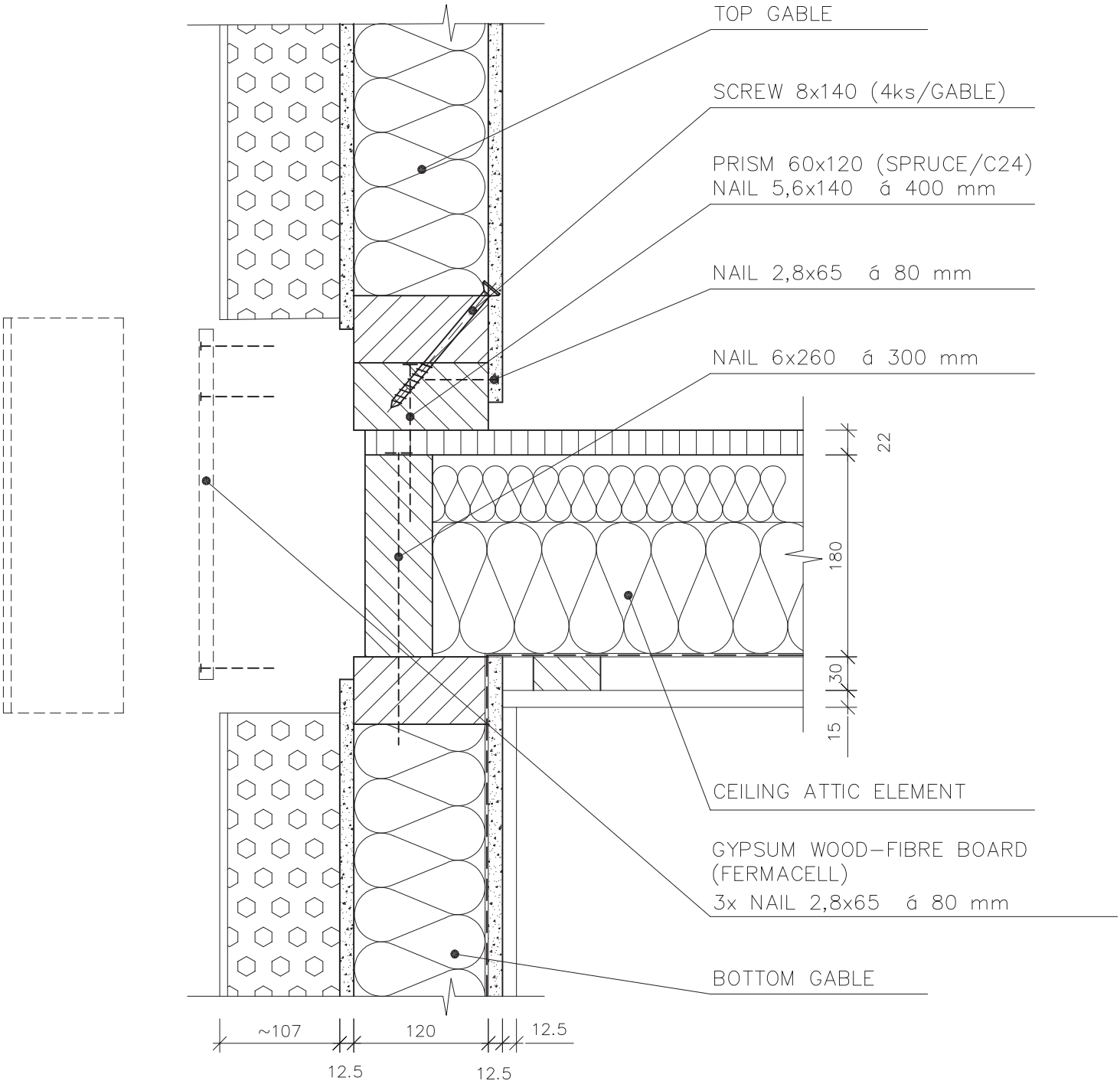

Scale applies to original 1:5	Remark: DETACHED HOUSE		Date				
	Worked out by:	Ing. Pavel Krupa	09/07	Alternation	Date	Signature	Index x
	Authorized by:	Tomáš Jánošík	09/07				x x x x
RD RÝMAŘOV	Type: GABLE						
	CONNETION WITH THE CEILING ATTIC ELEMENT						RD C 071

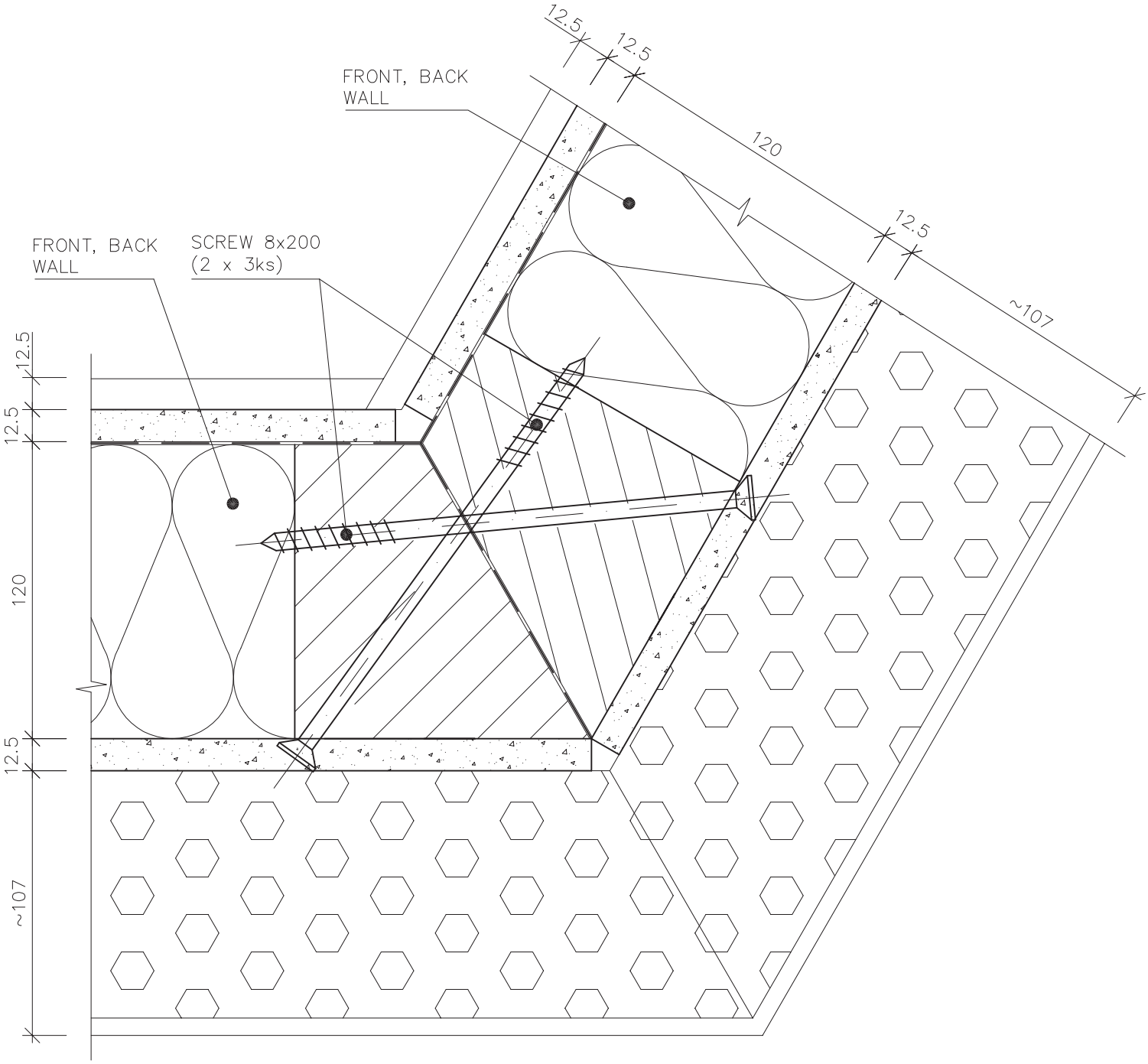

Scale applies to original 1:2	Remark: DETACHED HOUSE		Date				
	Worked out by:	Ing. Pavel Krupa	09/07	Alternation	Date	Signature	Index x
	Authorized by:	Tomáš Jánošík	09/07				x
							x
							x
							x

RD RÝMAŘOV

Type: FRONT, BACK WALL

ANGULAR CONNECTION – TH. 265

RD C 072

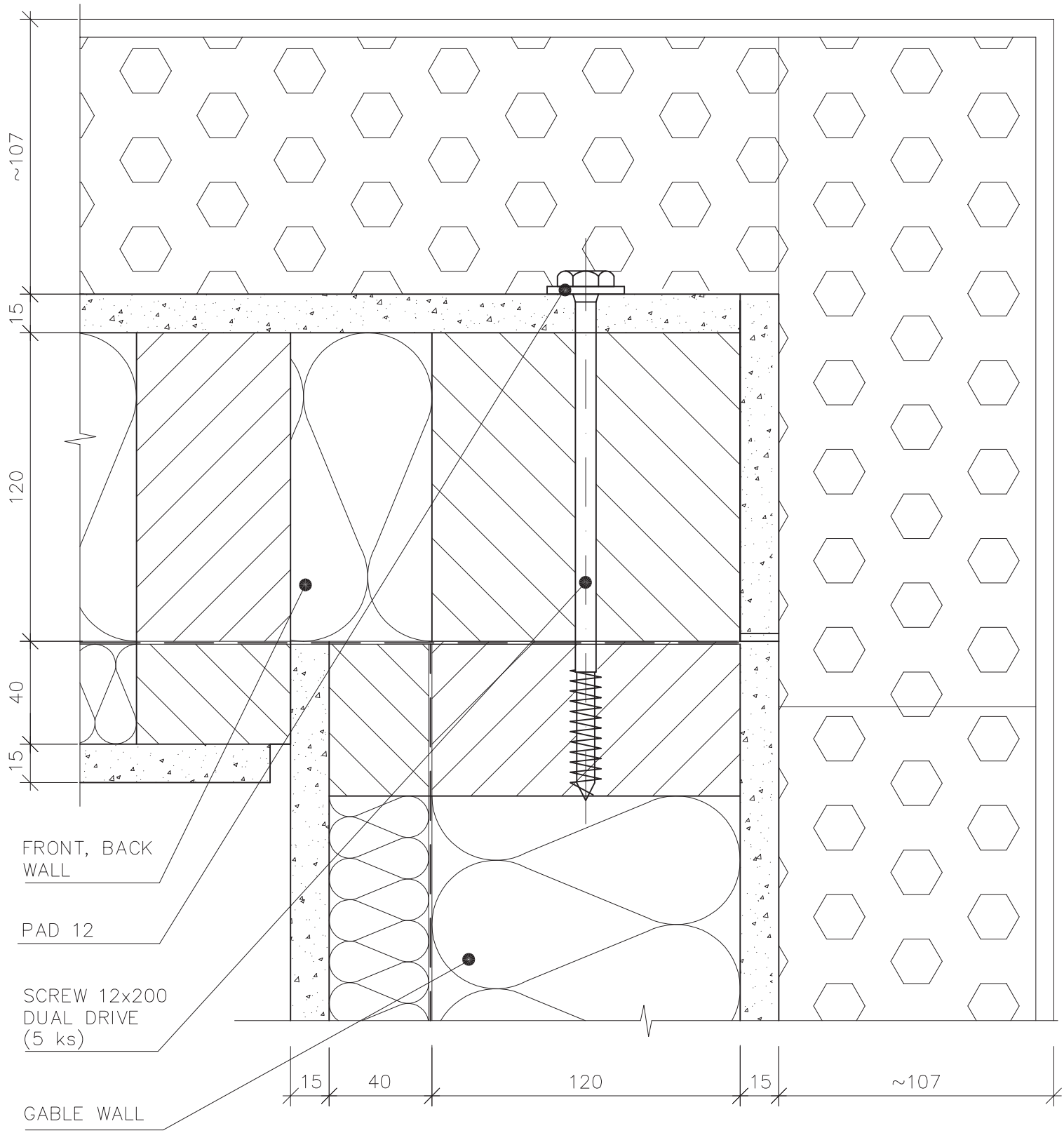

Scale applies to original 1:2	Remark: DETACHED HOUSE		Date				
	Worked out by:	Ing. Pavel Krupa	09/07	Alternation	Date	Signature	Index x x x x x
	Authorized by:	Tomáš Jánošík	09/07				
RD RÝMAŘOV	Type: FRONT/BACK WALL AND GABLE WALL						
	CORNER CONNECTION – TH. 297						RD C 080

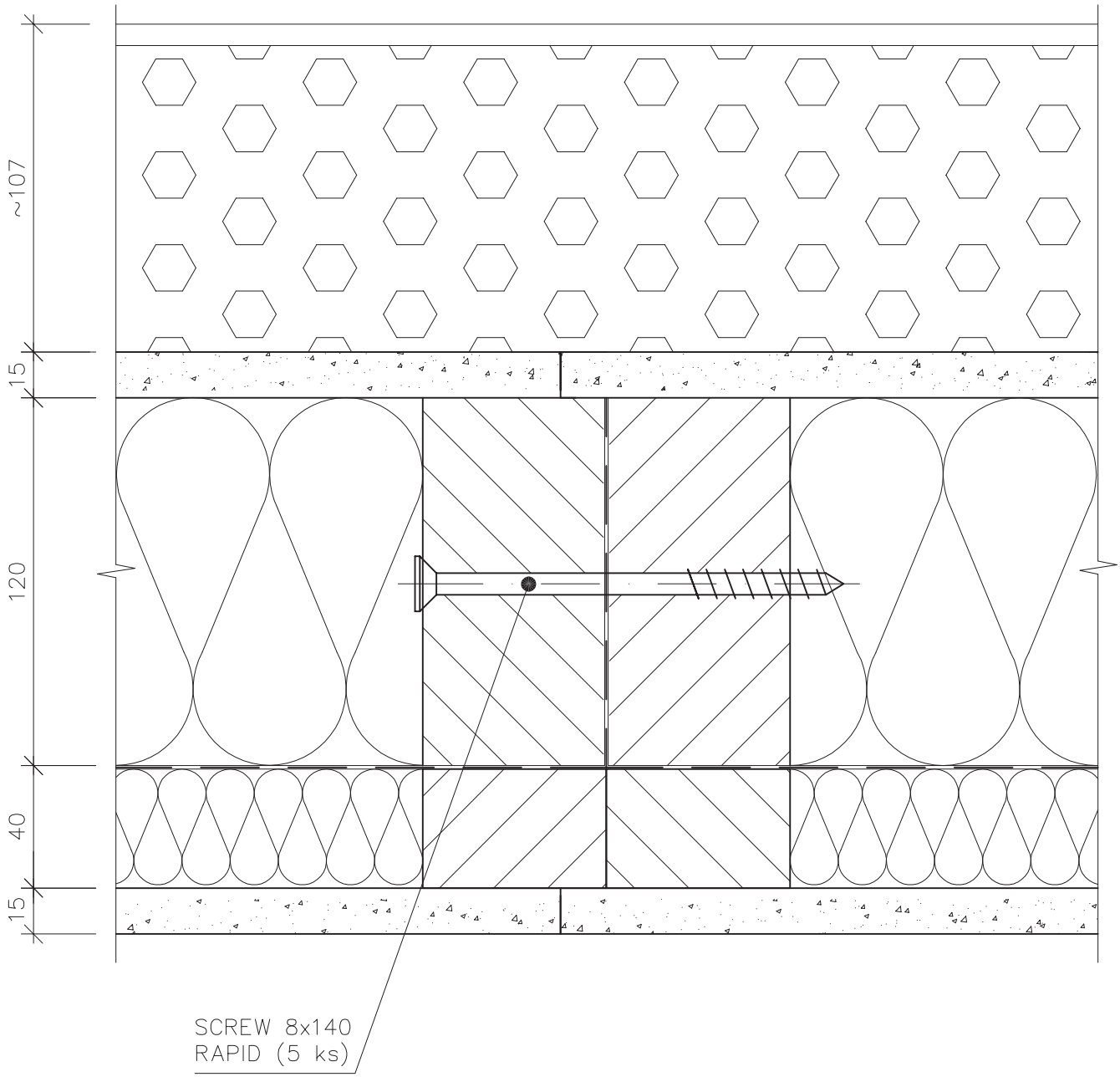

Scale applies to original 1:5	Remark: DETACHED HOUSE		Date				
	Worked out by:	Ing. Pavel Krupa	09/07	Alternation	Date	Signature	Index x x x x x
	Authorized by:	Tomáš Jánošík	09/07				
RD RÝMAŘOV	Type: FROT, BACK WALL AND GABLE WALL						
	HORIZONTAL CONNECTION – TH. 297					RD C 081	

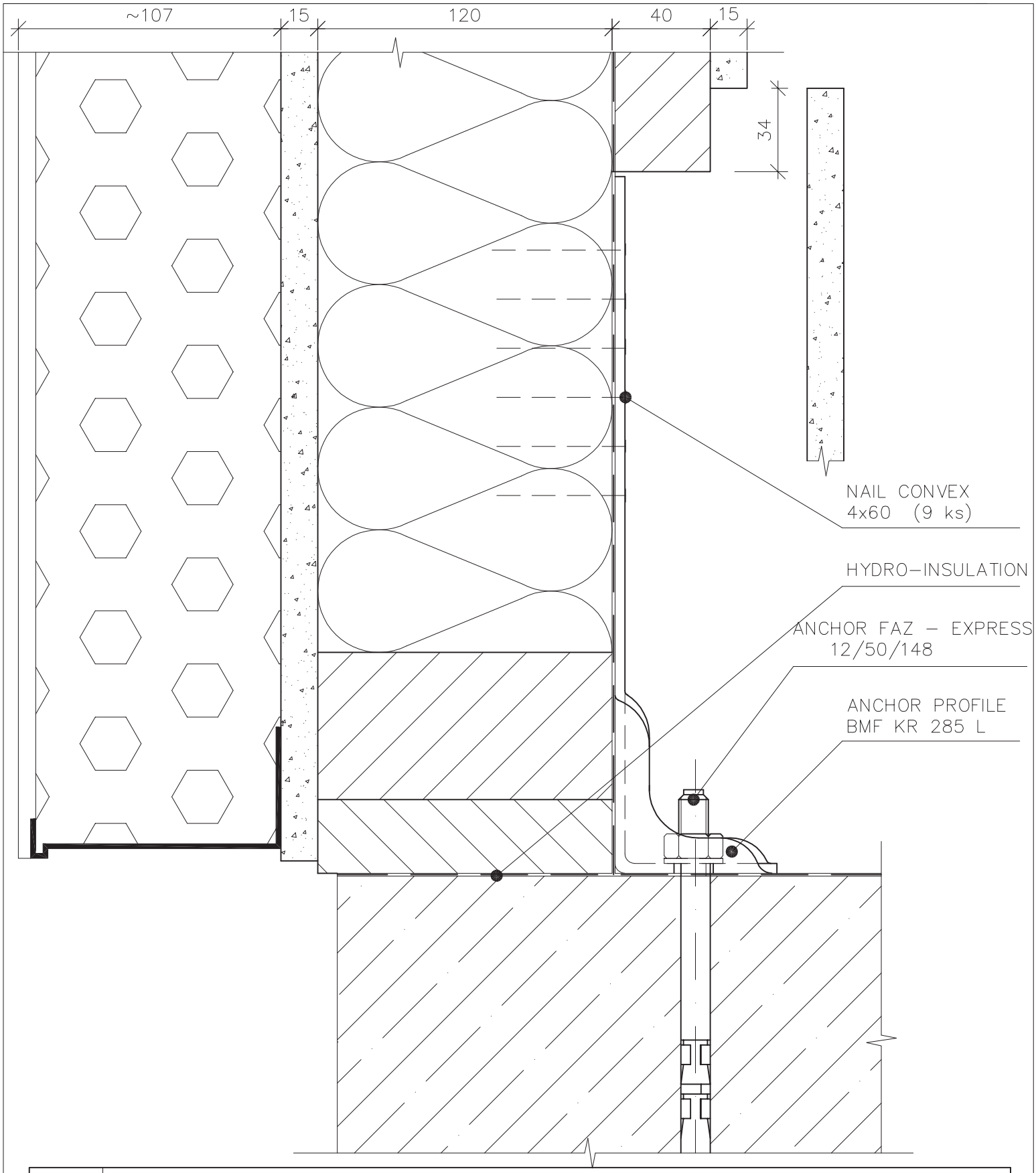

Scale applies to original 1:2	Remark: DETACHED HOUSE		Date				
	Worked out by:	Ing. Pavel Krupa	09/07	Alternation	Date	Signature	Index x
	Authorized by:	Tomáš Jánošík	09/07				x x x x
RD RÝMAŘOV	Type: FRONT, BACK WALL AND GABLE WALL						
	ANCHORING ON THE GROUNDWORK						RD C 082

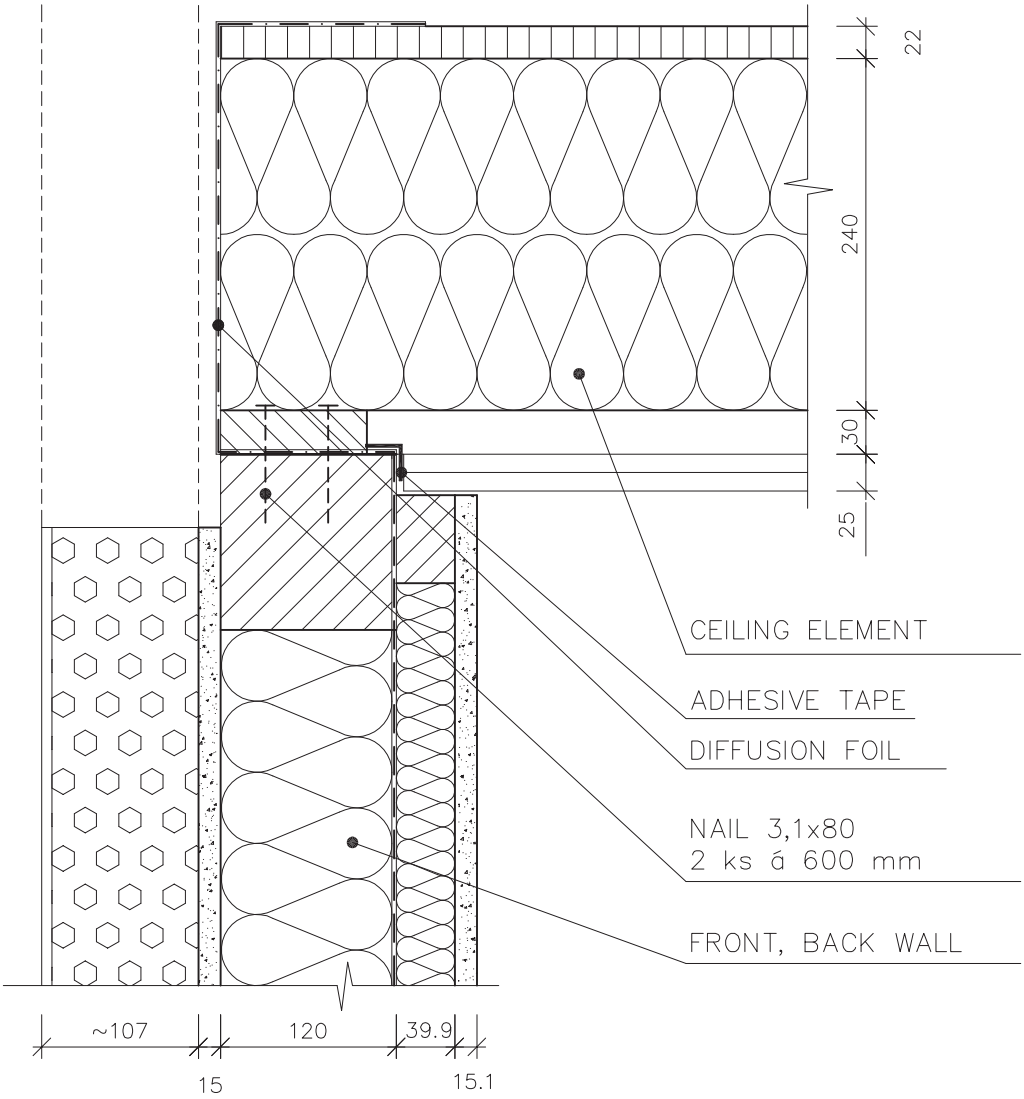

Scale applies to original 1:5	Remark: DETACHED HOUSE		Date				
	Worked out by:	Ing. Pavel Krupa	09/07	Alternation	Date	Signature	Index x
	Authorized by:	Tomáš Jánošík	09/07				x x x x
RD RÝMAŘOV	Type: FRONT, BACK WALL						
	CONNETION WITH THE CEILING ELEMENT						RD C 083

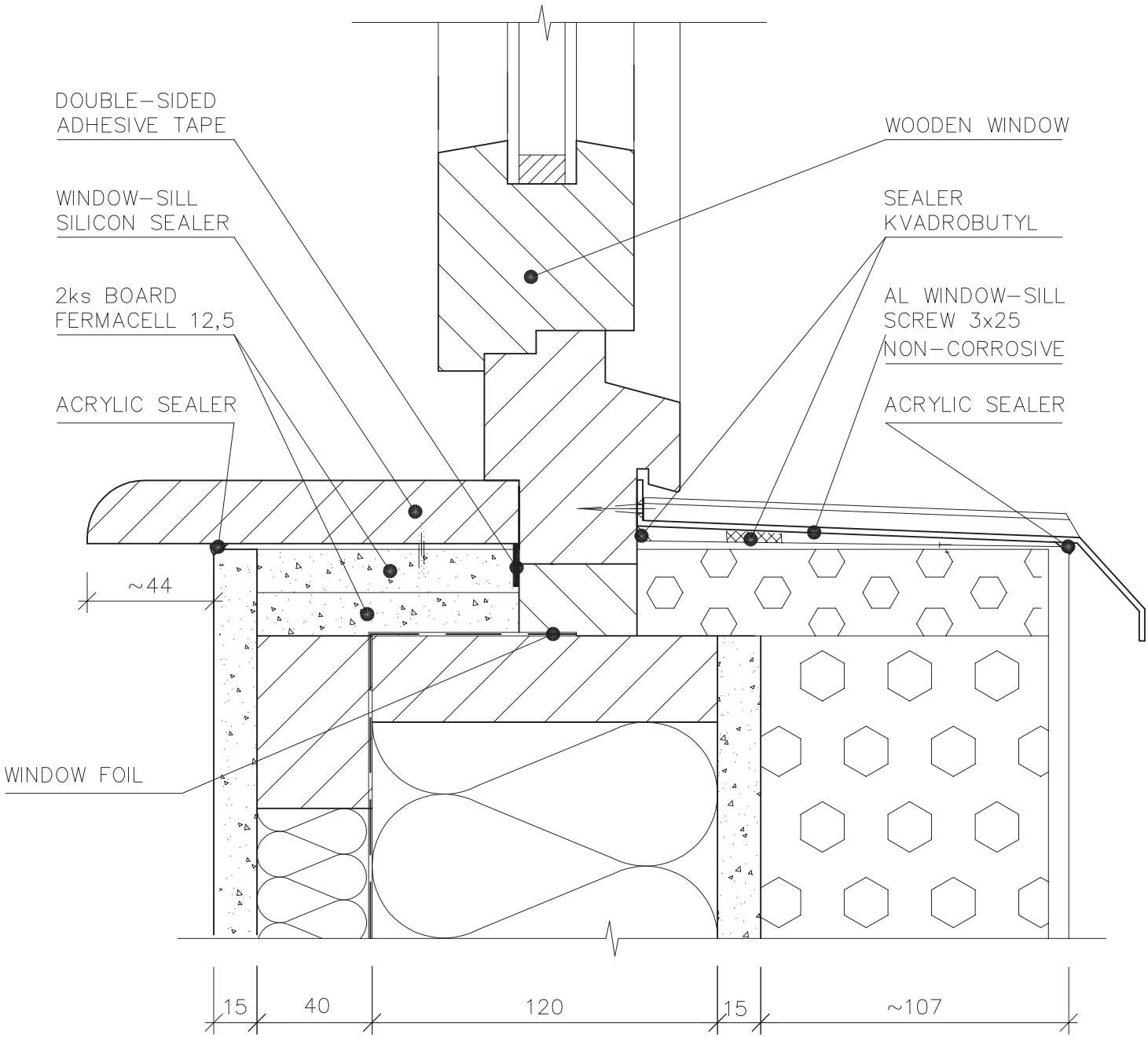

Scale applies to original 1:2	Remark: DETACHED HOUSE		Date				
	Worked out by:	Ing. Pavel Krupa	09/07	Alternation	Date	Signature	Index x x x x x
	Authorized by:	Tomáš Jánošík	09/07				
RD RÝMAŘOV	Type: VERTICAL SECTIONAL VIEW OF THE PARAPET				RD C 084		

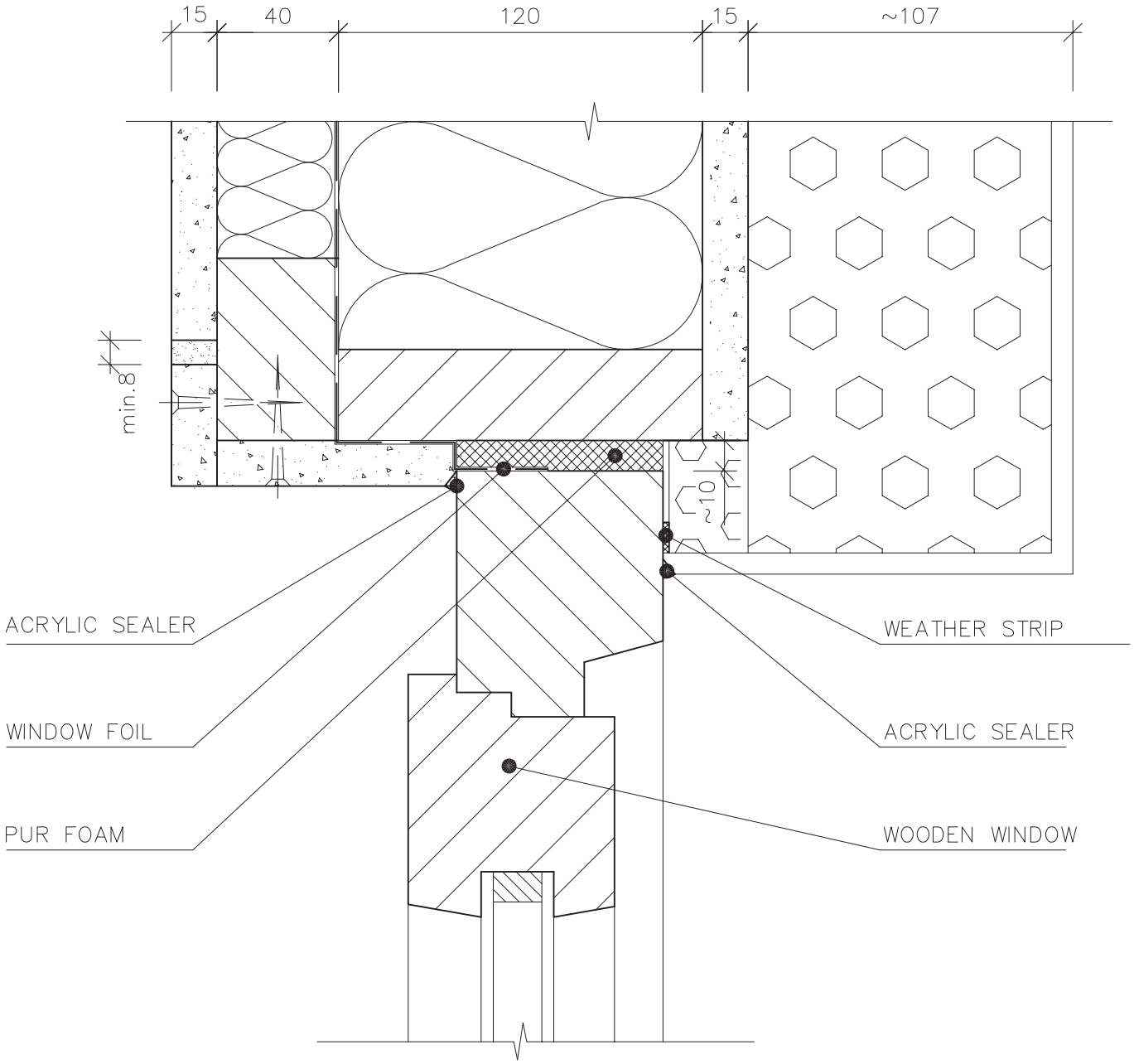

Scale applies to original 1:2	Remark: DETACHED HOUSE		Date				
	Worked out by:	Ing. Pavel Krupa	09/07	Alternation	Date	Signature	Index x
	Authorized by:	Tomáš Jánošík	09/07				x x x x
RD RÝMAŘOV	Type: VERTICAL SECTIONAL VIEW OF THE WINDOW HEAD						RD C 085

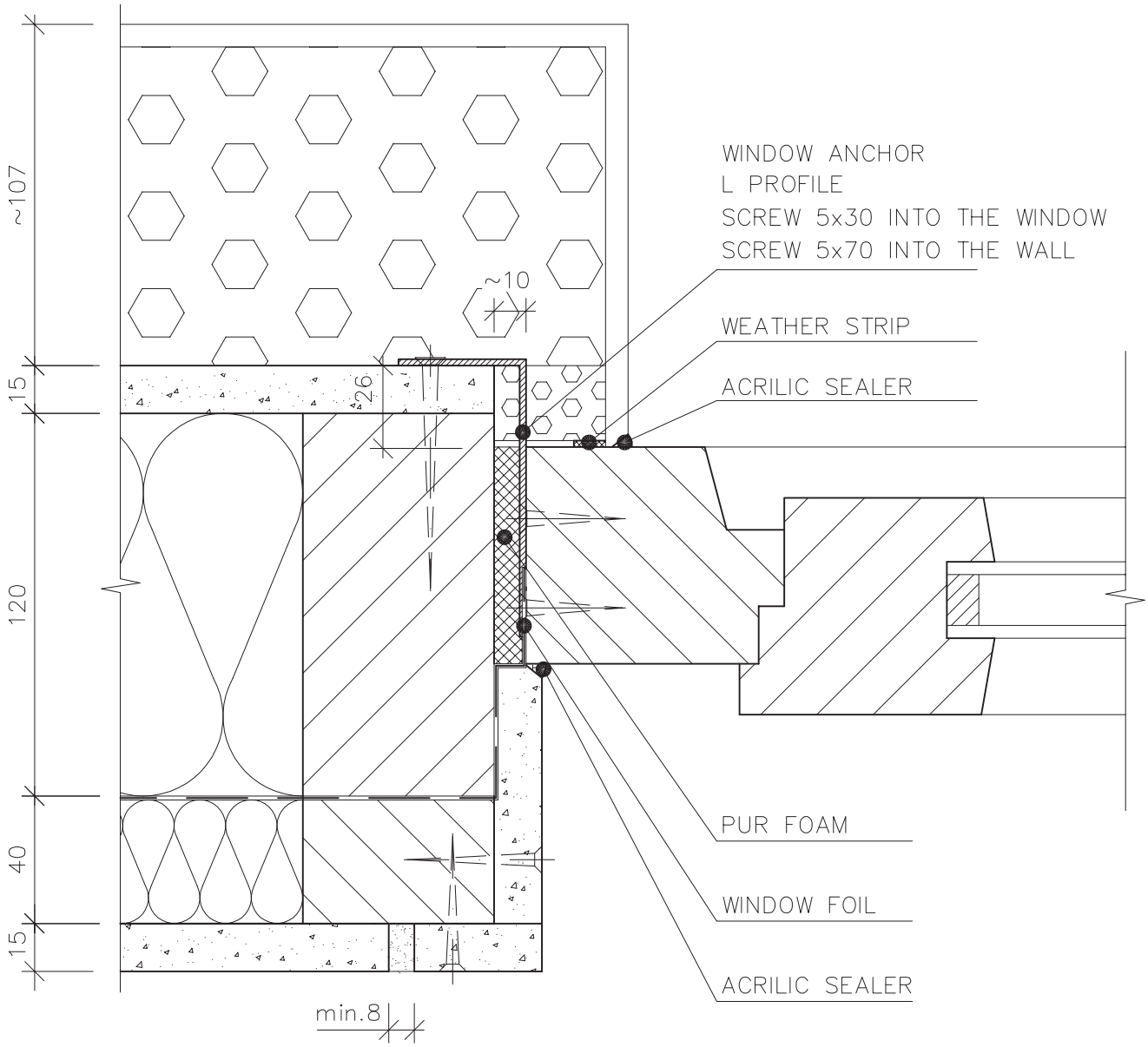

Scale applies to original 1:2	Remark: DETACHED HOUSE		Date				
	Worked out by:	Jánošík Tomáš	09/07	Alternation	Date	Signature	Index x x x x x
	Authorized by:						
RD RÝMAŘOV	Type: HORIZONTAL SECTIONAL VIEW OF THE WINDOW LINING						RD C 086

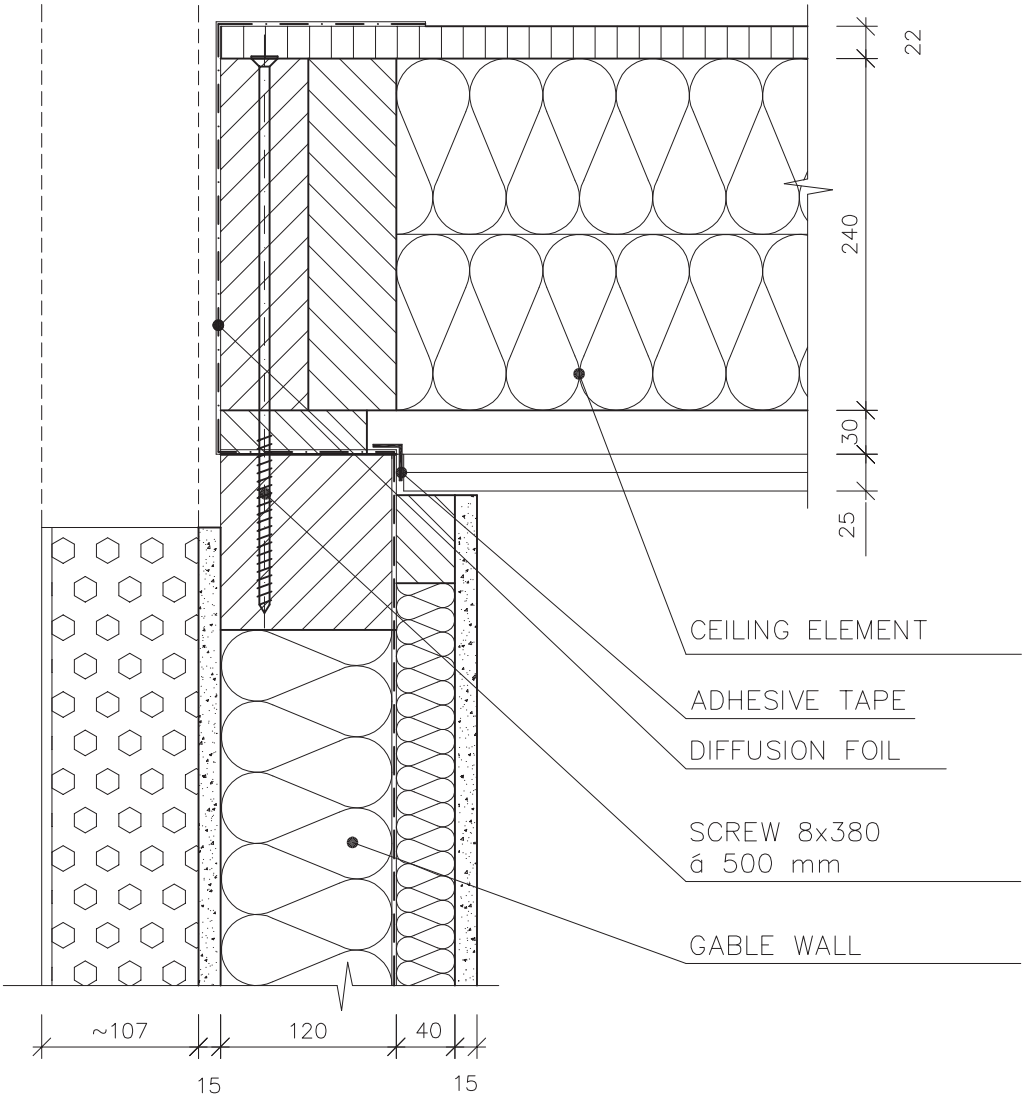

Scale applies to original 1:5	Remark: DETACHED HOUSE		Date				
	Worked out by:	Ing. Pavel Krupa	09/07	Alternation	Date	Signature	Index x x x x x
	Authorized by:	Tomáš Jánošík	09/07				
RD RÝMAŘOV	Type: GABLE WALL						
	CONNETION WITH THE CEILING ELEMENT						RD C 087

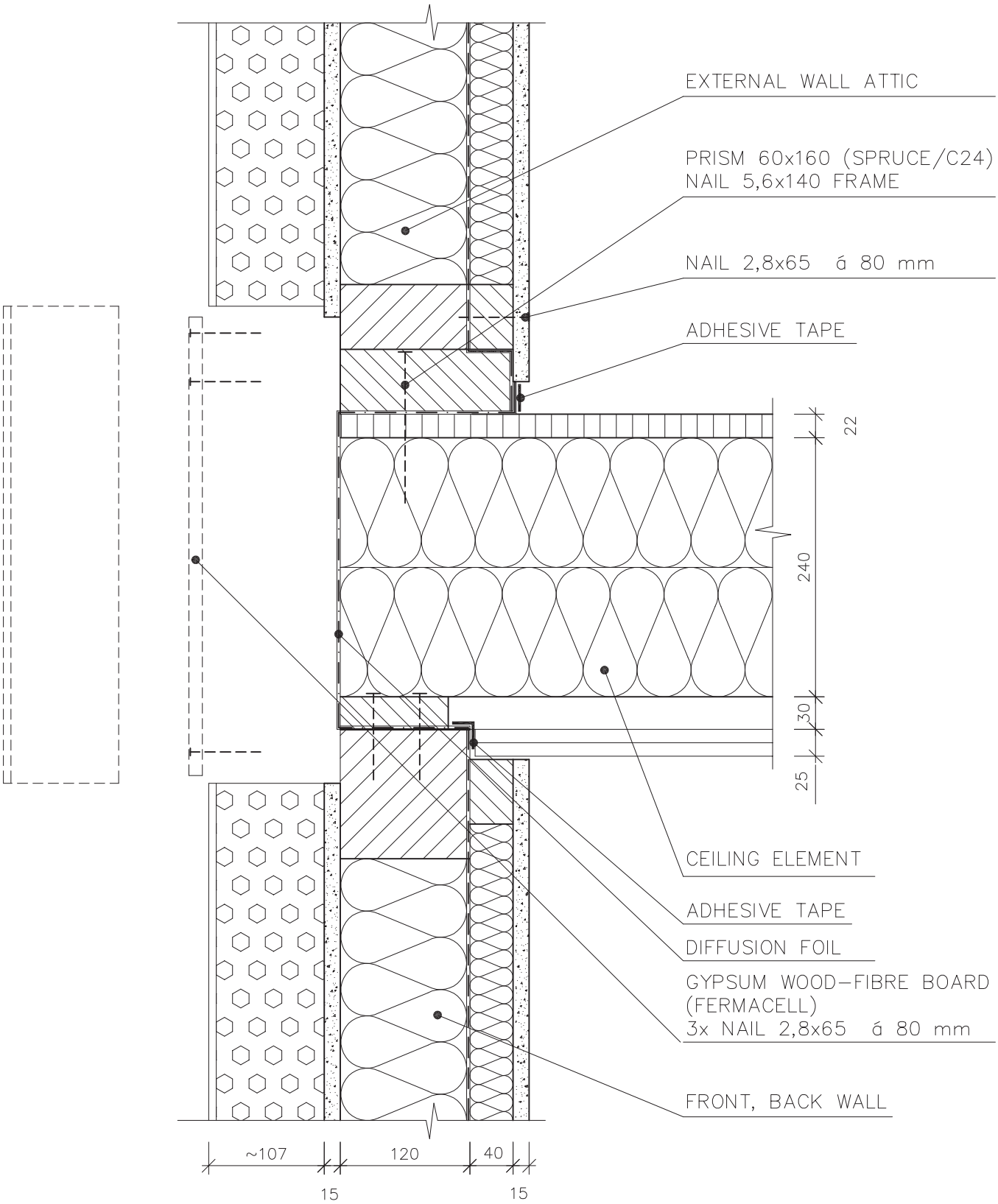

Scale applies to original 1:5	Remark: DETACHED HOUSE		Date				
	Worked out by:	Ing. Pavel Krupa	09/07	Alternation	Date	Signature	Index x x x x x
	Authorized by:	Tomáš Jánošík	09/07				
RD RÝMAŘOV	Type: EXTERNAL WALL ATTIC						
	CONNETION WITH THE CEILING ELEMENT						RD C 088

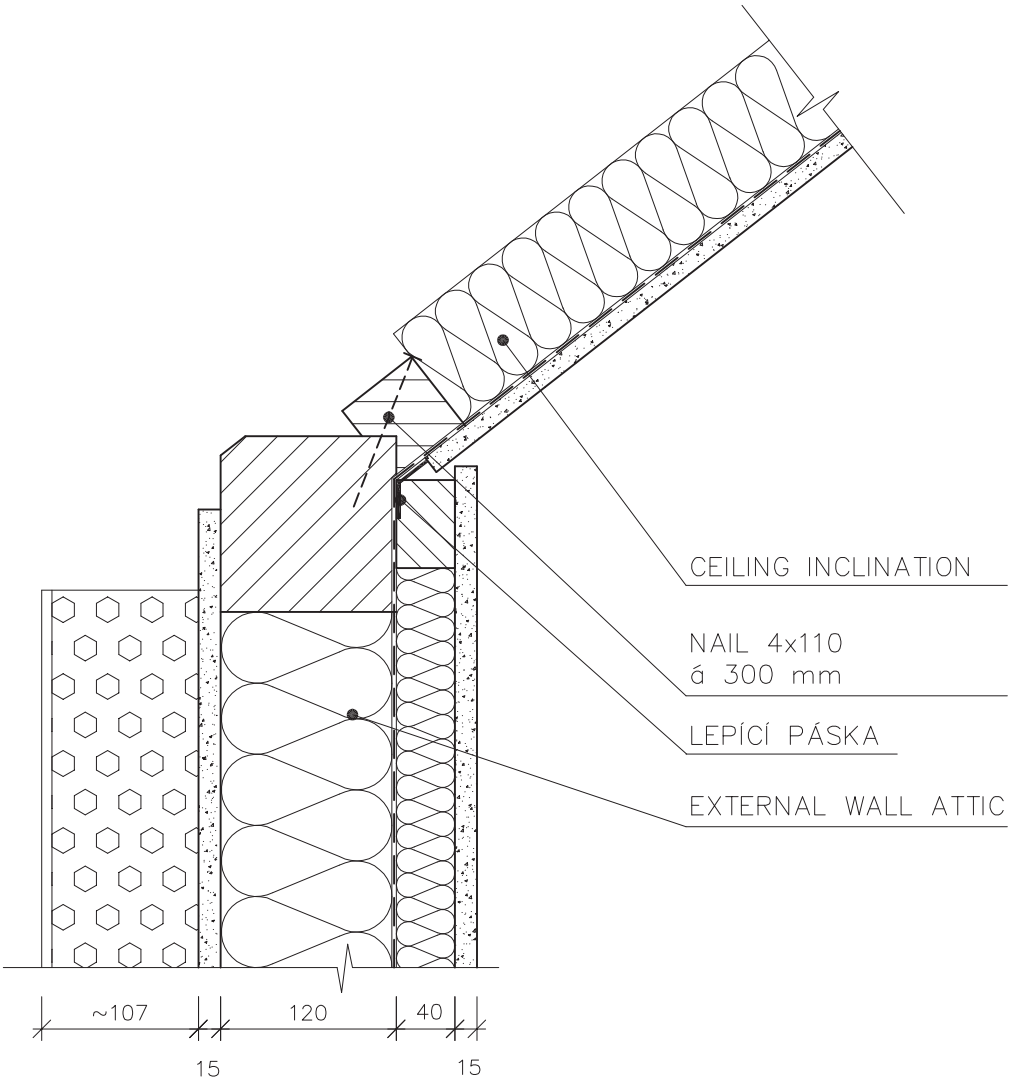

Scale applies to original 1:5	Remark: DETACHED HOUSE – FOR INCLIN. 38°		Date				
	Worked out by:	Ing. Pavel Krupa	09/07	Alternation	Date	Signature	Index x
	Authorized by:	Tomáš Jánošík	09/07				x
							x
							x
							x
RD RÝMAŘOV	Type: EXTERNAL WALL ATTIC						
	CONNETION WITH THE CEILING INCLINATION					RD C 089	

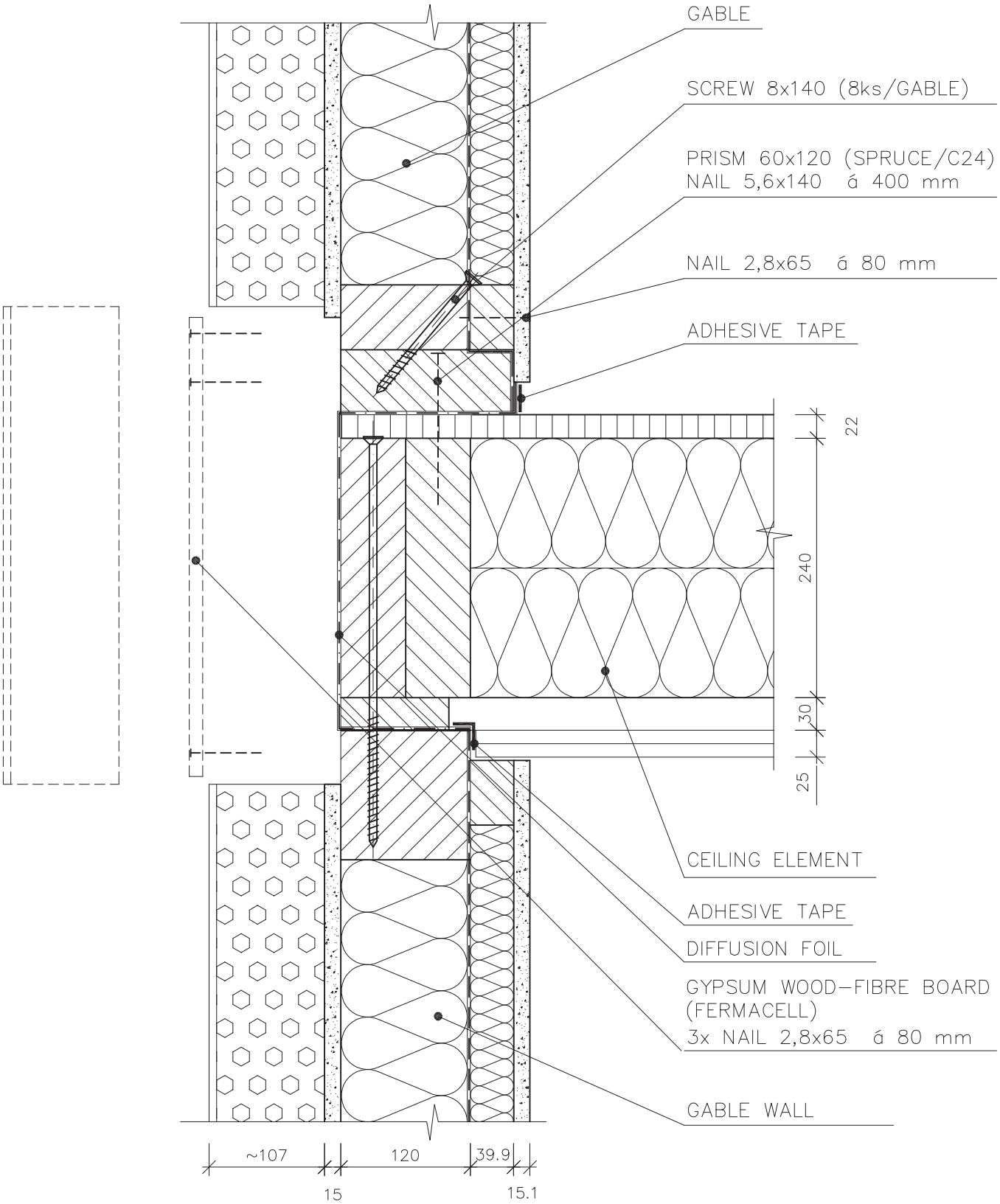

Scale applies to original 1:5	Remark: DETACHED HOUSE		Date				
	Worked out by:	Ing. Pavel Krupa	09/07	Alternation	Date	Signature	Index x x x x x
	Authorized by:	Tomáš Jánošík	09/07				
RD RÝMAŘOV	Type: GABLE						
	CONNETION WITH THE CEILING ELEMENT						RD C 090

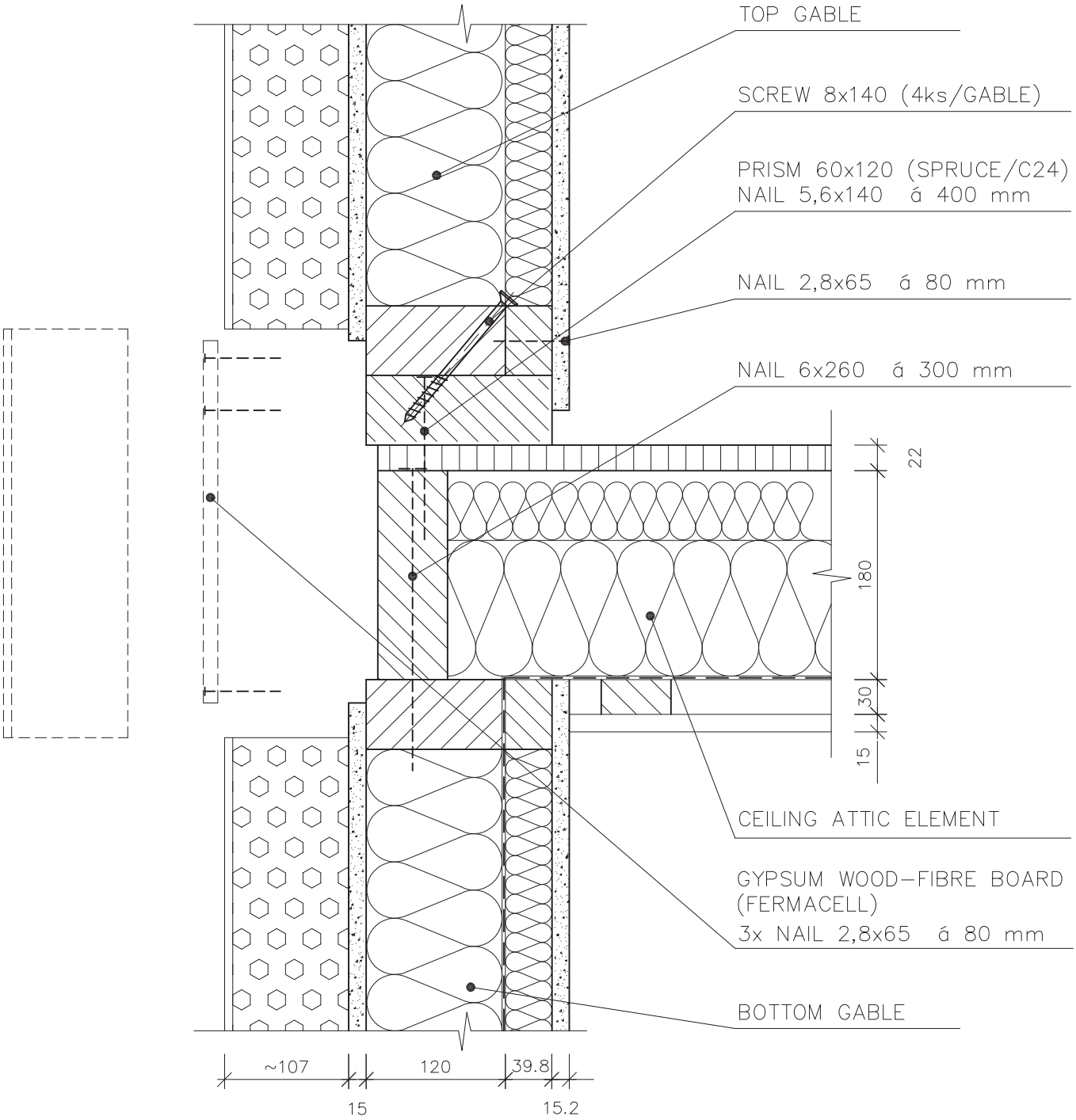

Scale applies to original 1:5	Remark: DETACHED HOUSE		Date				
	Worked out by:	Ing. Pavel Krupa	09/07	Alternation	Date	Signature	Index x
	Authorized by:	Tomáš Jánošík	09/07				x x x x
RD RÝMAŘOV	Type: GABLE						
	CONNETION WITH THE CEILING ATTIC ELEMENT						RD C 091

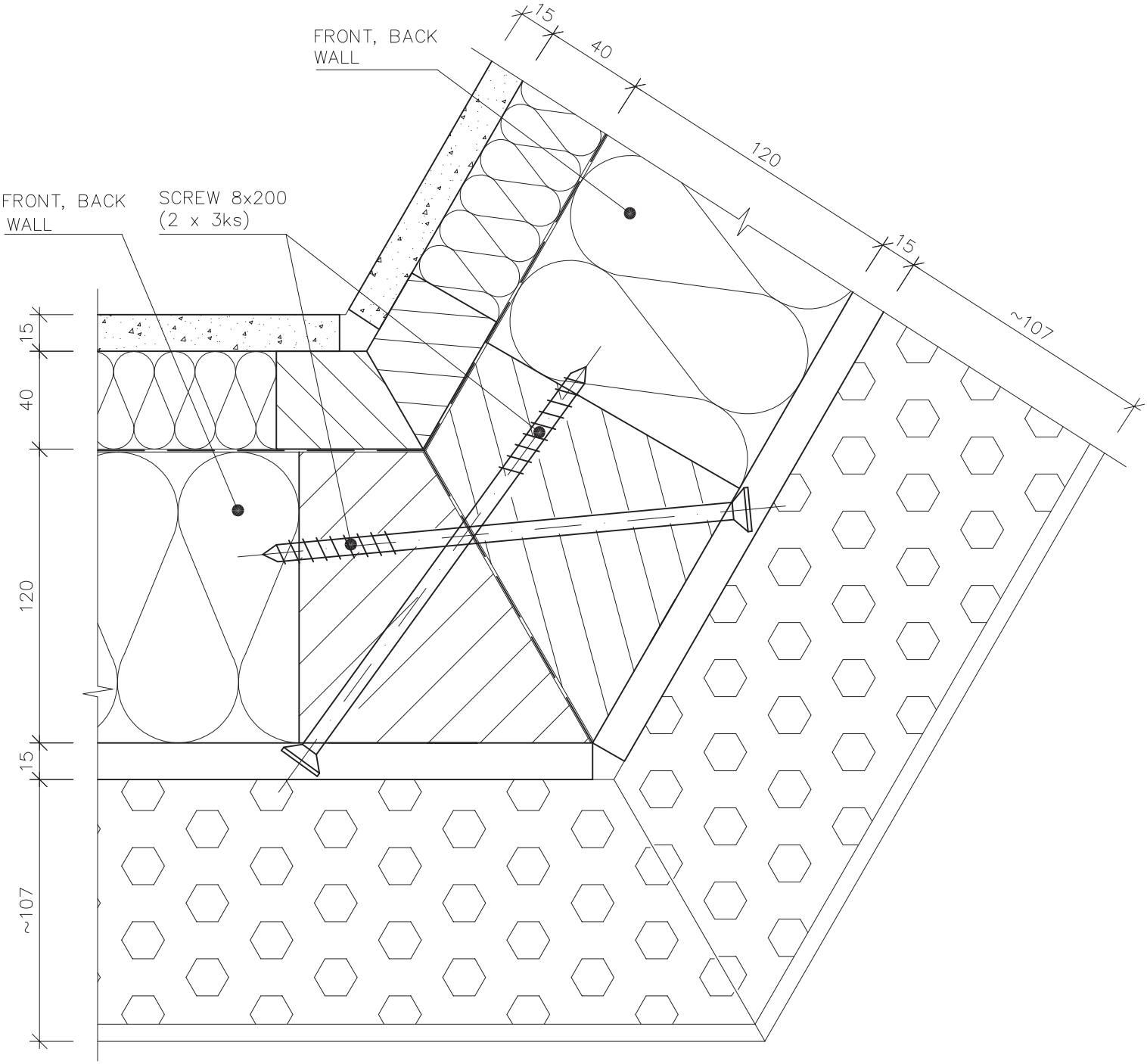

Scale applies to original 1:2	Remark: DETACHED HOUSE		Date				
	Worked out by:	Ing. Pavel Krupa	09/07	Alternation	Date	Signature	Index x x x x x
	Authorized by:	Tomáš Jánošík	09/07				
RD RÝMAŘOV	Type: FRONT, BACK WALL						
	ANGULAR CONNECTION – TH. 297				RD C 092		

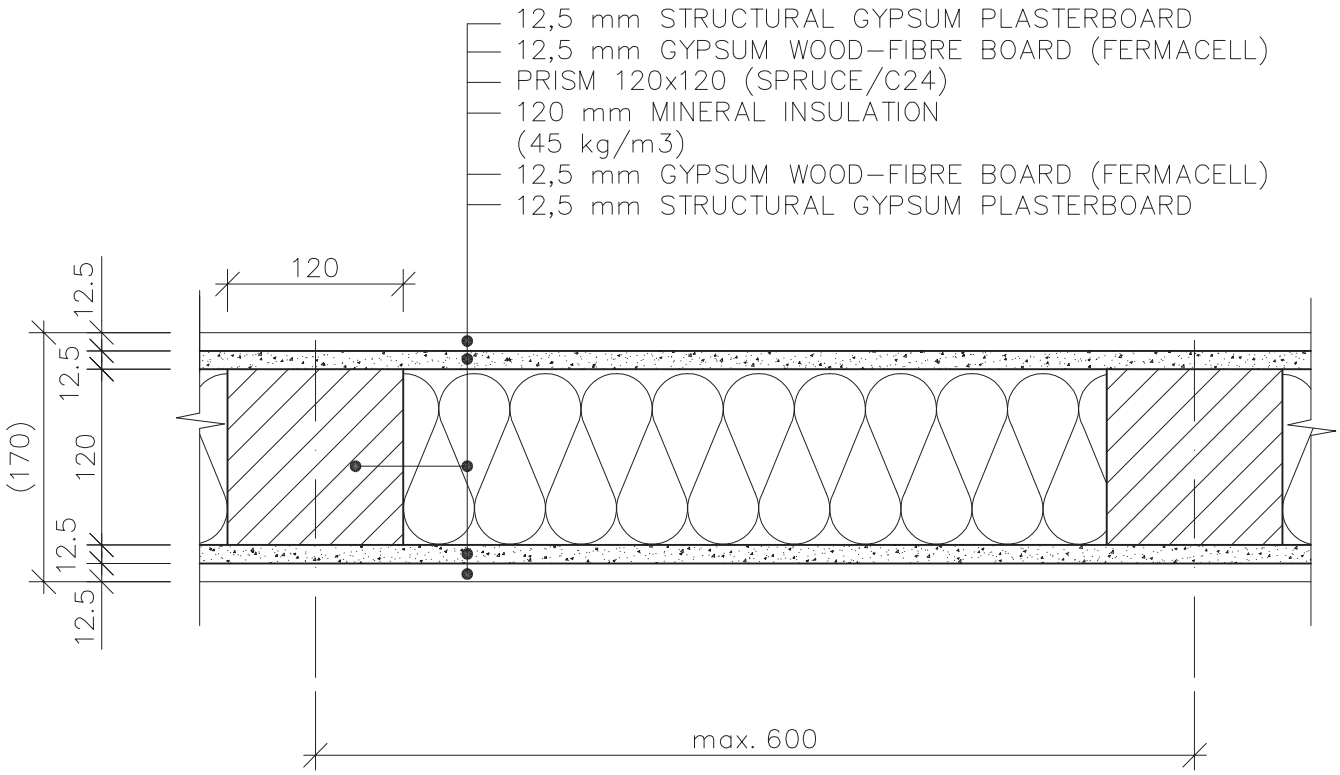

Scale applies to original 1:5	Remark: DETACHED HOUSE		Date				
	Worked out by:	Jánošík Tomáš	01/06	Alternation	Date	Signature	Index x x x x x
	Authorized by:						
RD RÝMAŘOV	Type: INTERIOR BEARING WALL						
	HORIZONTAL SECTIONAL VIEW – TH. 170				RD C 101		

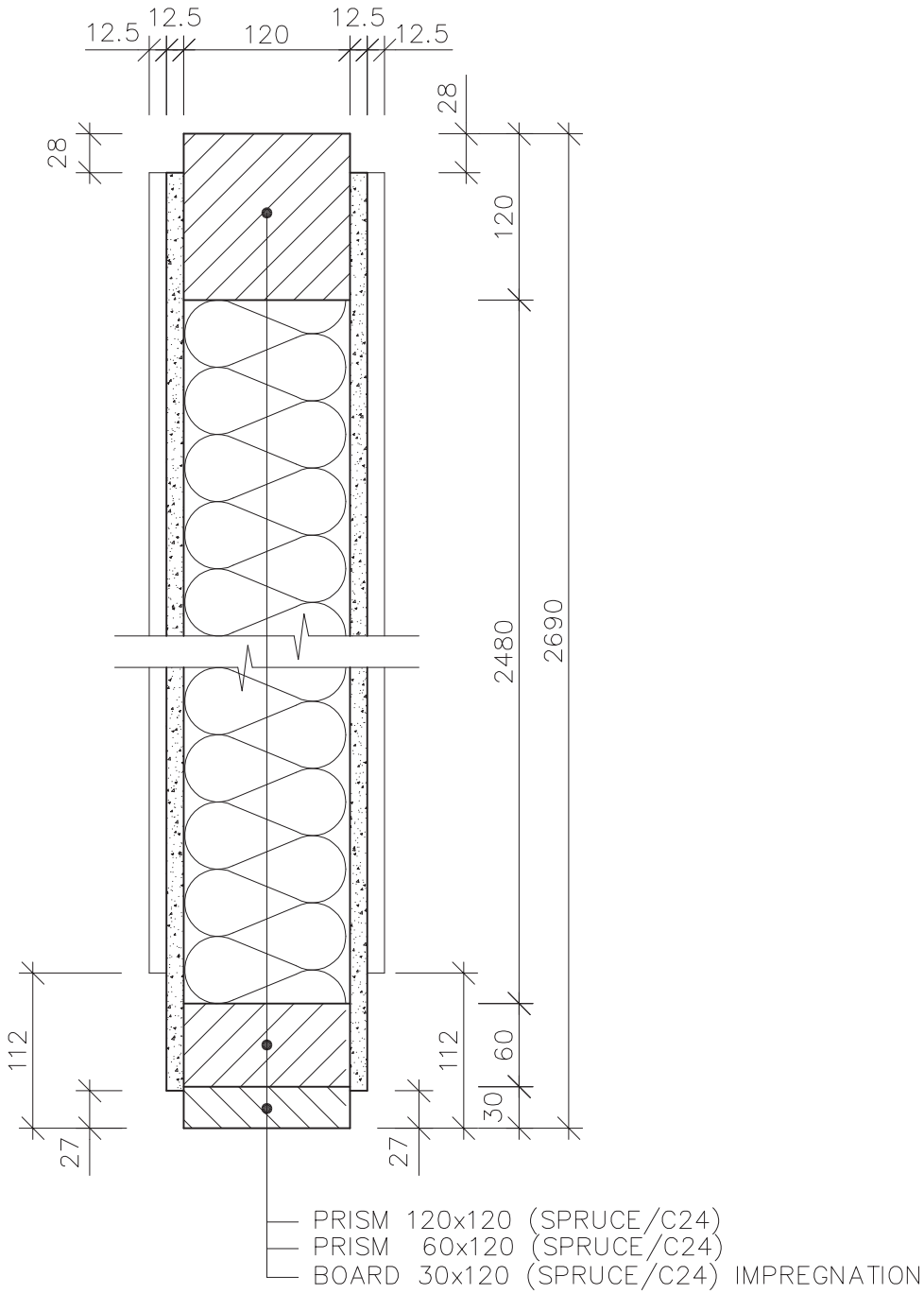

Scale applies to original 1:5	Remark: DETACHED HOUSE		Date				
	Worked out by:	Jánošík Tomáš	01/06	Alternation	Date	Signature	Index x x x x x
	Authorized by:						
RD RÝMAŘOV	Type: INTERIOR BEARING WALL						
	VERTICAL SECTIONAL VIEW – TH. 170				RD C 102		

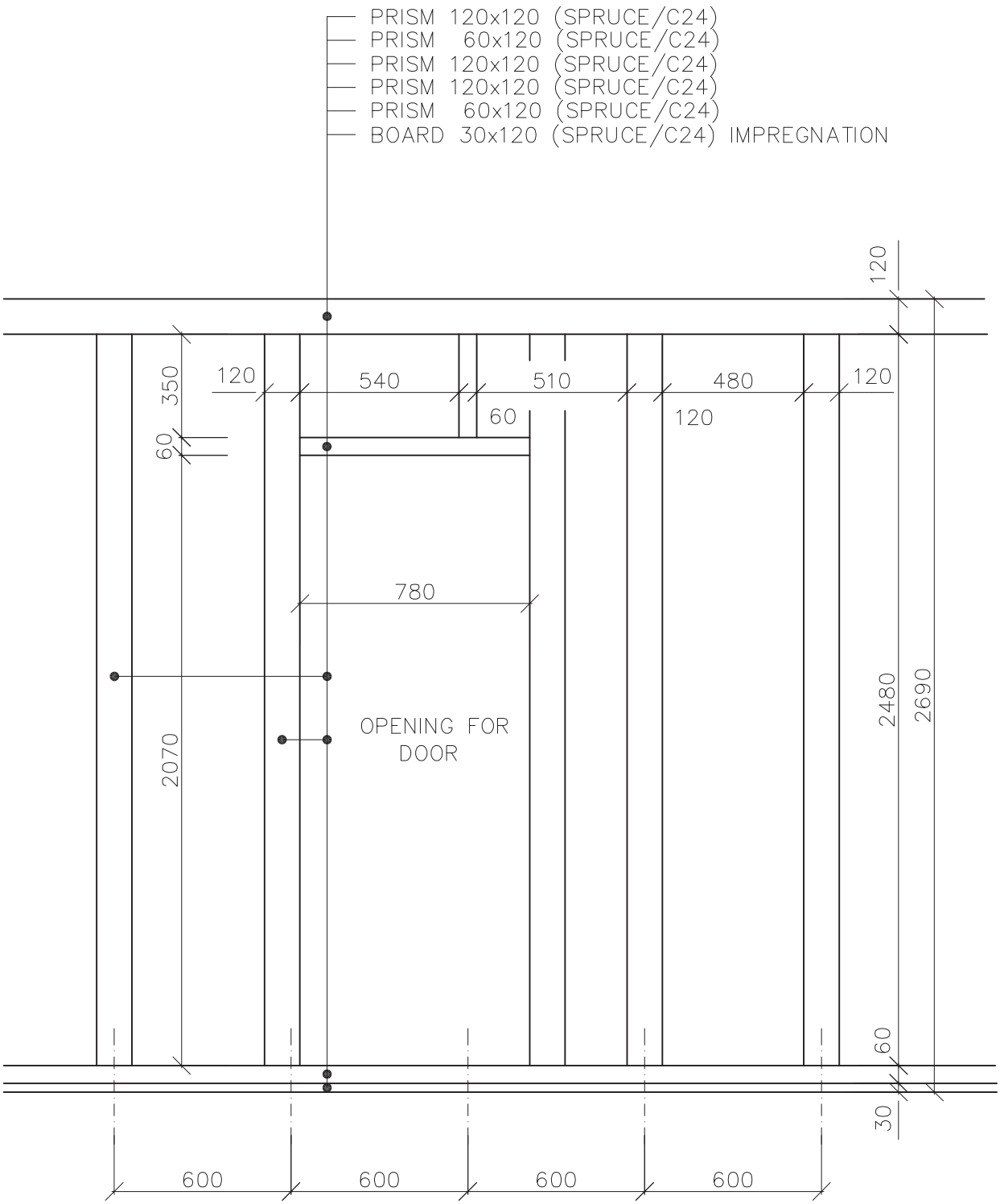

Scale applies to original 1:20	Remark: DETACHED HOUSE		Date				
	Worked out by:	Jánošík Tomáš	01/06	Alternation	Date	Signature	Index x x x x x
	Authorized by:						
RD RÝMAŘOV	Type: INTERIOR BEARING WALL						
	VIEW OF THE FRAME – TH. 170				RD C 103		

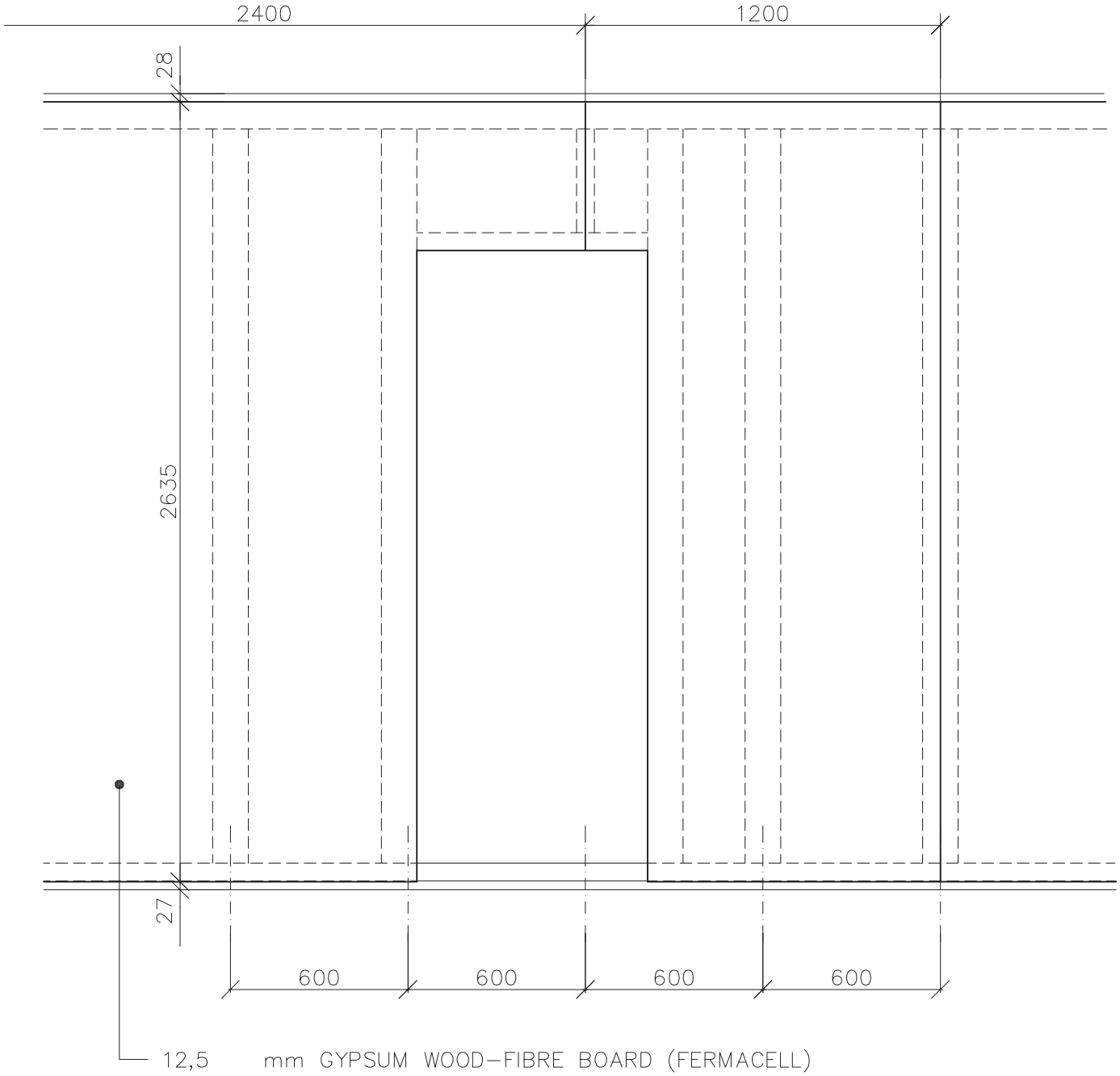

Scale applies to original 1:20	Remark: DETACHED HOUSE		Date				
	Worked out by:	Jánošík Tomáš	01/06	Alternation	Date	Signature	Index
	Authorized by:						x x x x x
RD RÝMAŘOV	Type: INTERIOR BEARING WALL						
	VIEW OF THE SHEATHING – TH. 170				RD C 104		

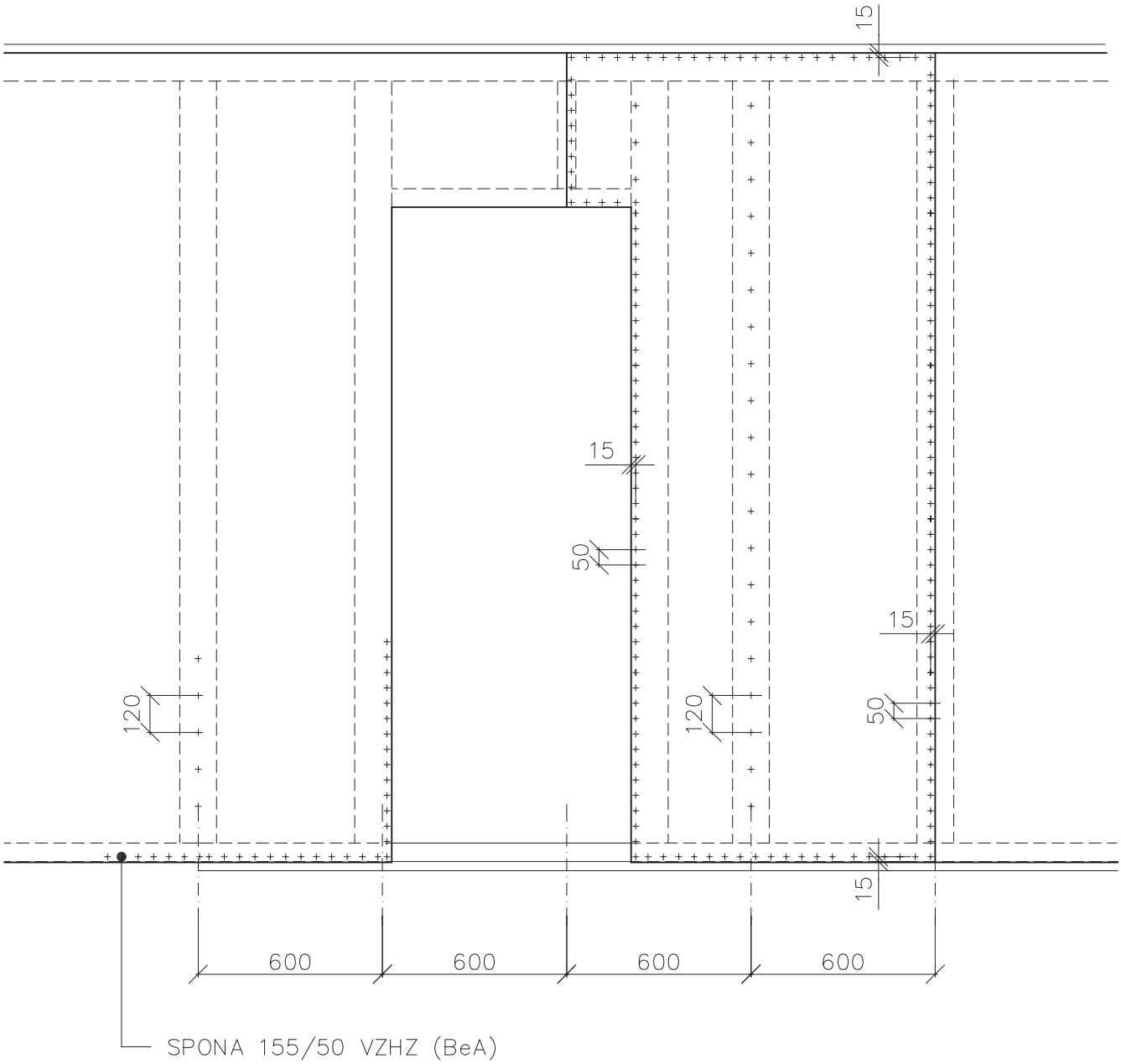

Scale applies to original 1:20	Remark: DETACHED HOUSE		Date			
	Worked out by:	Jánošík Tomáš	01/06	Alternation	Date	Signature	Index
	Authorized by:						

Type: INTERIOR BEARING WALL

RD RÝMAŘOV

FIXATION OF THE SHEATING ON THE FRAME – TH. 170

RD C 105

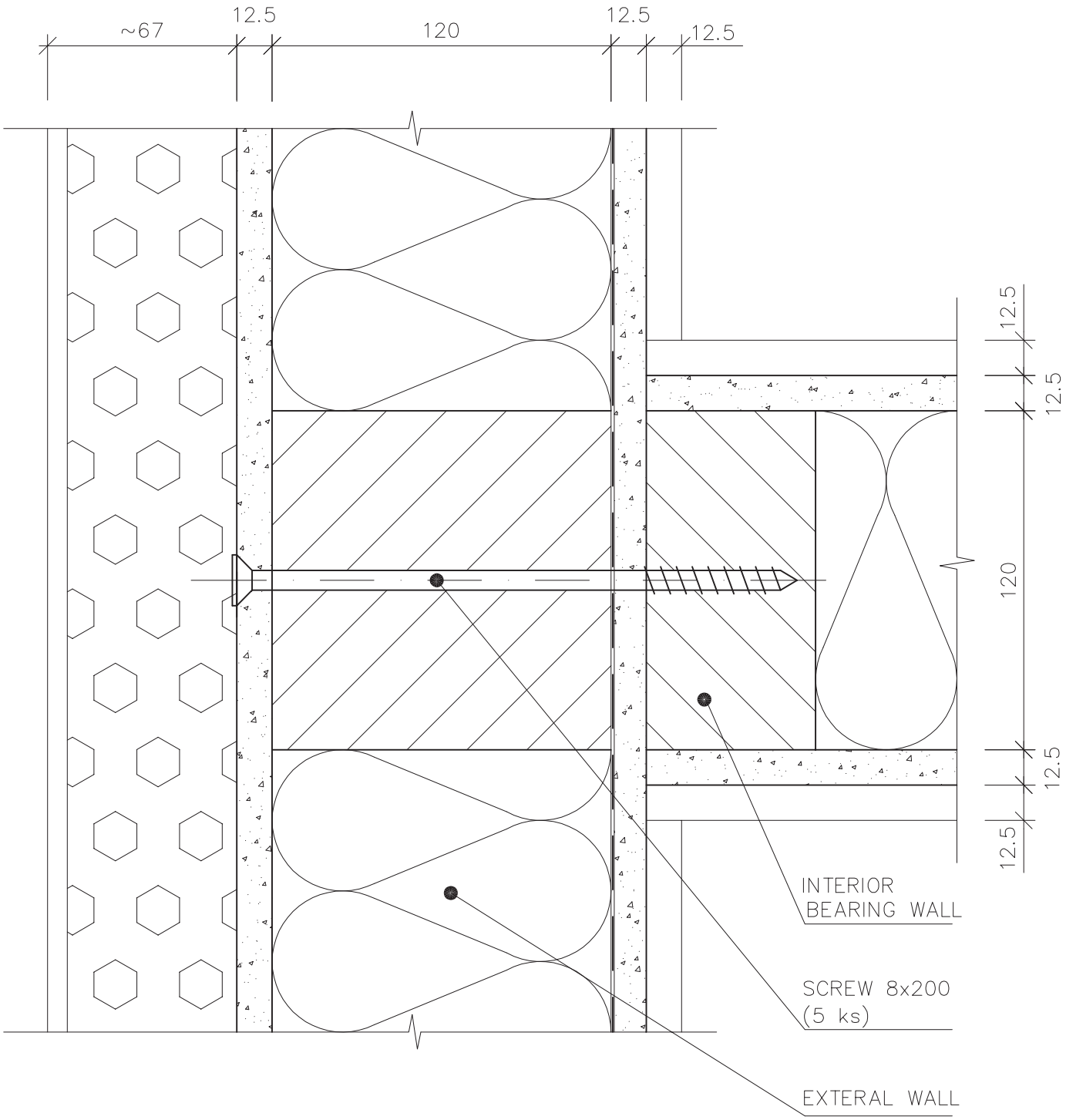

Scale applies to original 1:2	Remark: DETACHED HOUSE		Date				
	Worked out by:	Jánošík Tomáš	01/06	Alternation	Date	Signature	Index x x x x x
	Authorized by:						
RD RÝMAŘOV	Type: INTERIOR BEARING WALL						
	CONNECTION WITH THE EXTERAL WALL						RD C 110

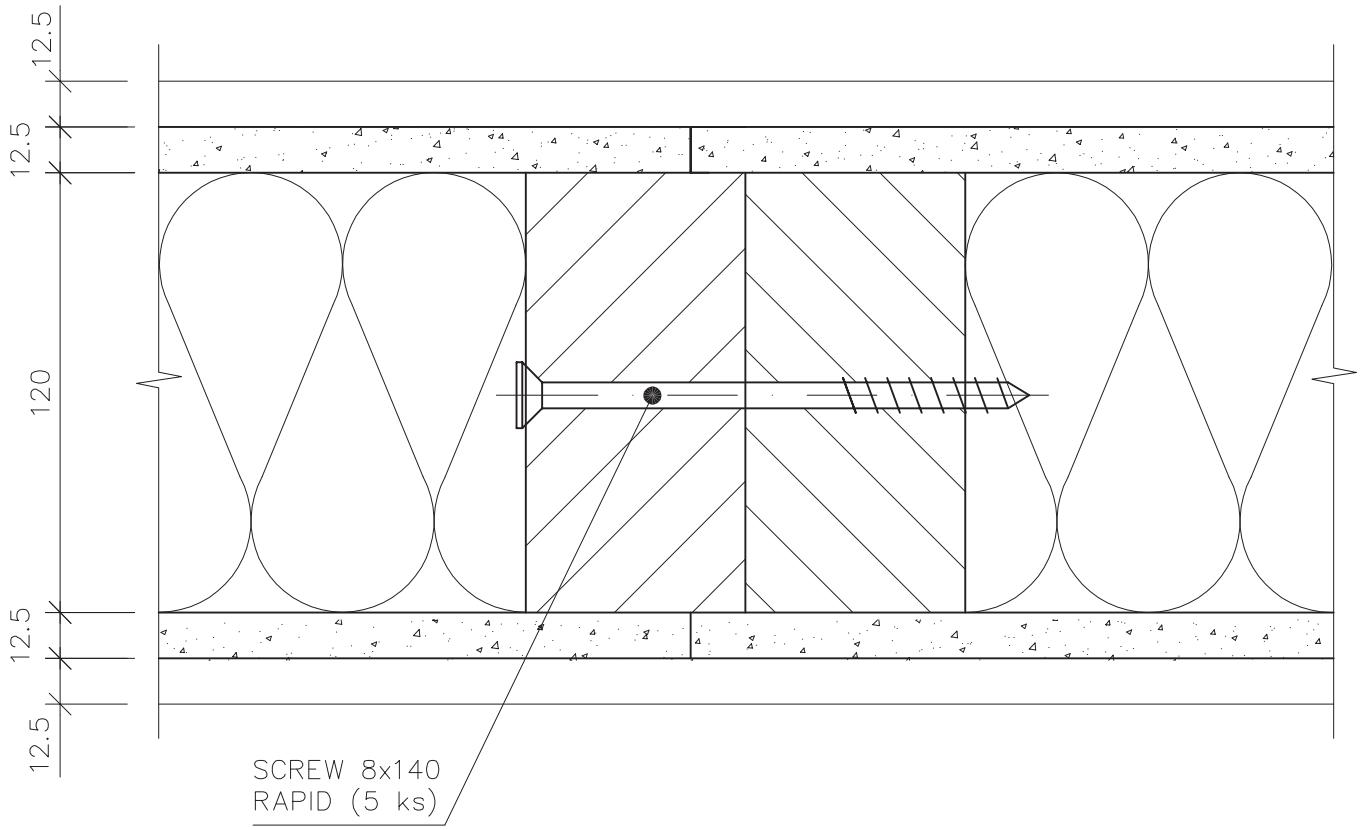

Scale applies to original 1:2	Remark: DETACHED HOUSE		Date				
	Worked out by:	Jánošík Tomáš	01/06	Alternation	Date	Signature	Index x
	Authorized by:						x
							x
							x
							x
RD RÝMAŘOV	Type: INTERIOR BEARING WALL						
	HORIZONTAL CONNECTION – TH. 170					RD C 111	

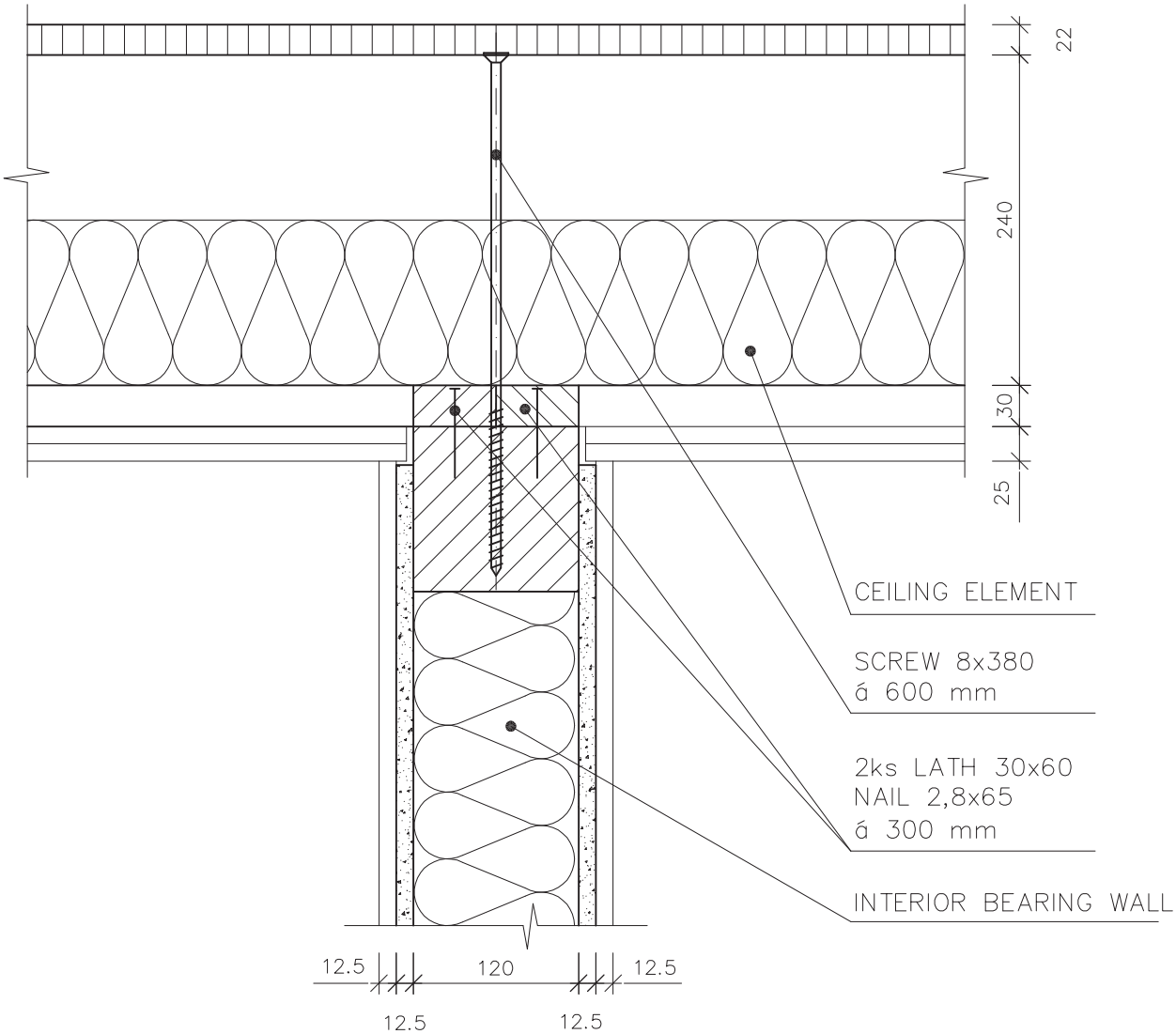

Scale applies to original 1:5	Remark: DETACHED HOUSE		Date				
	Worked out by:	Jánošík Tomáš	01/06	Alternation	Date	Signature	Index x x x x x
	Authorized by:						
RD RÝMAŘOV	Type: INTERIOR BEARING WALL						
	CONNETION WITH THE CEILING ELEMENT				RD C 112		

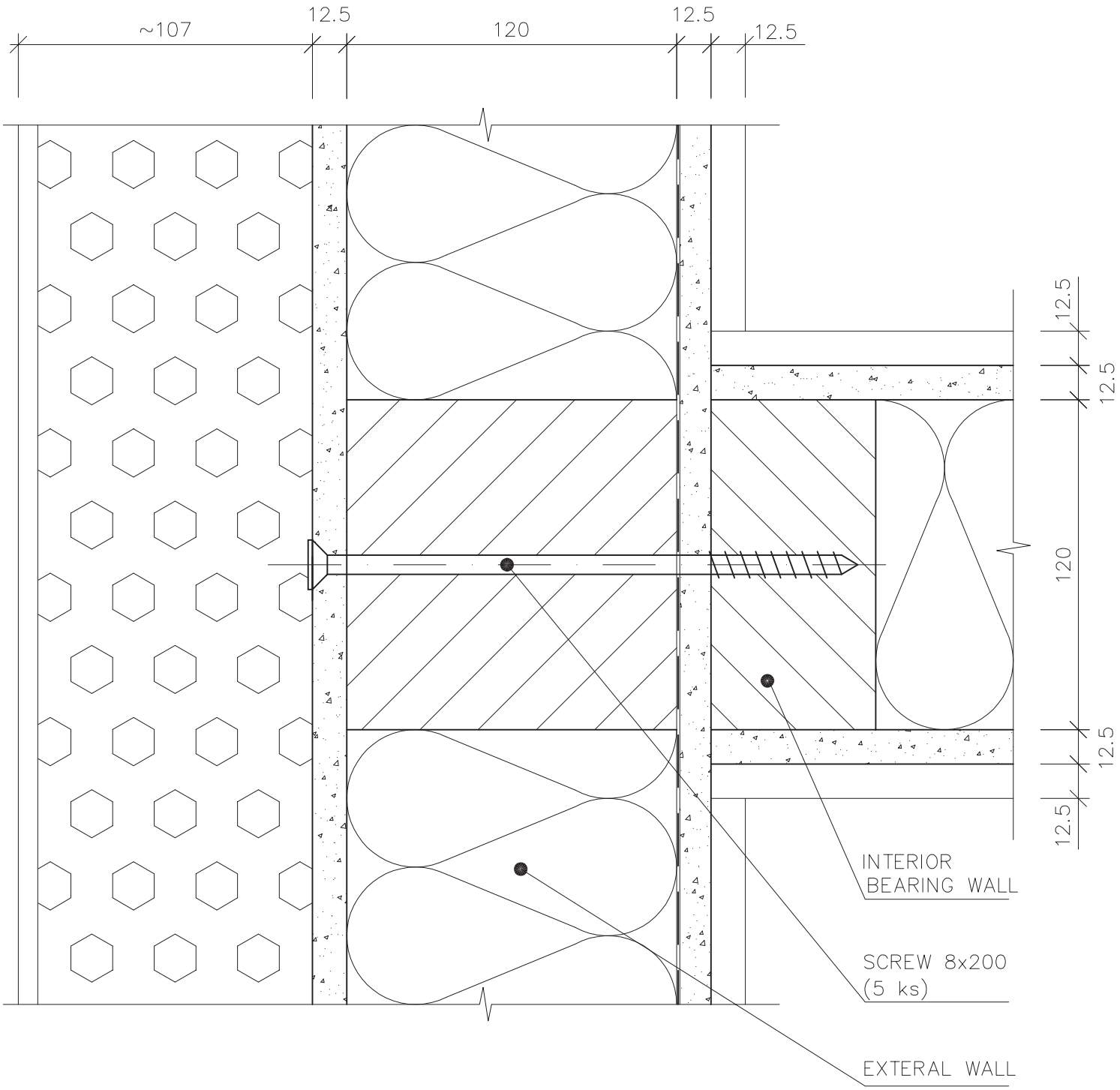

Scale applies to original 1:2	Remark: DETACHED HOUSE		Date				
	Worked out by:	Ing. Pavel Krupa	09/07	Alternation	Date	Signature	Index x
	Authorized by:	Tomáš Jánošík	09/07				x x x x
RD RÝMAŘOV	Type: INTERIOR BEARING WALL						
	CONNECTION WITH THE EXTERAL WALL						RD C 113

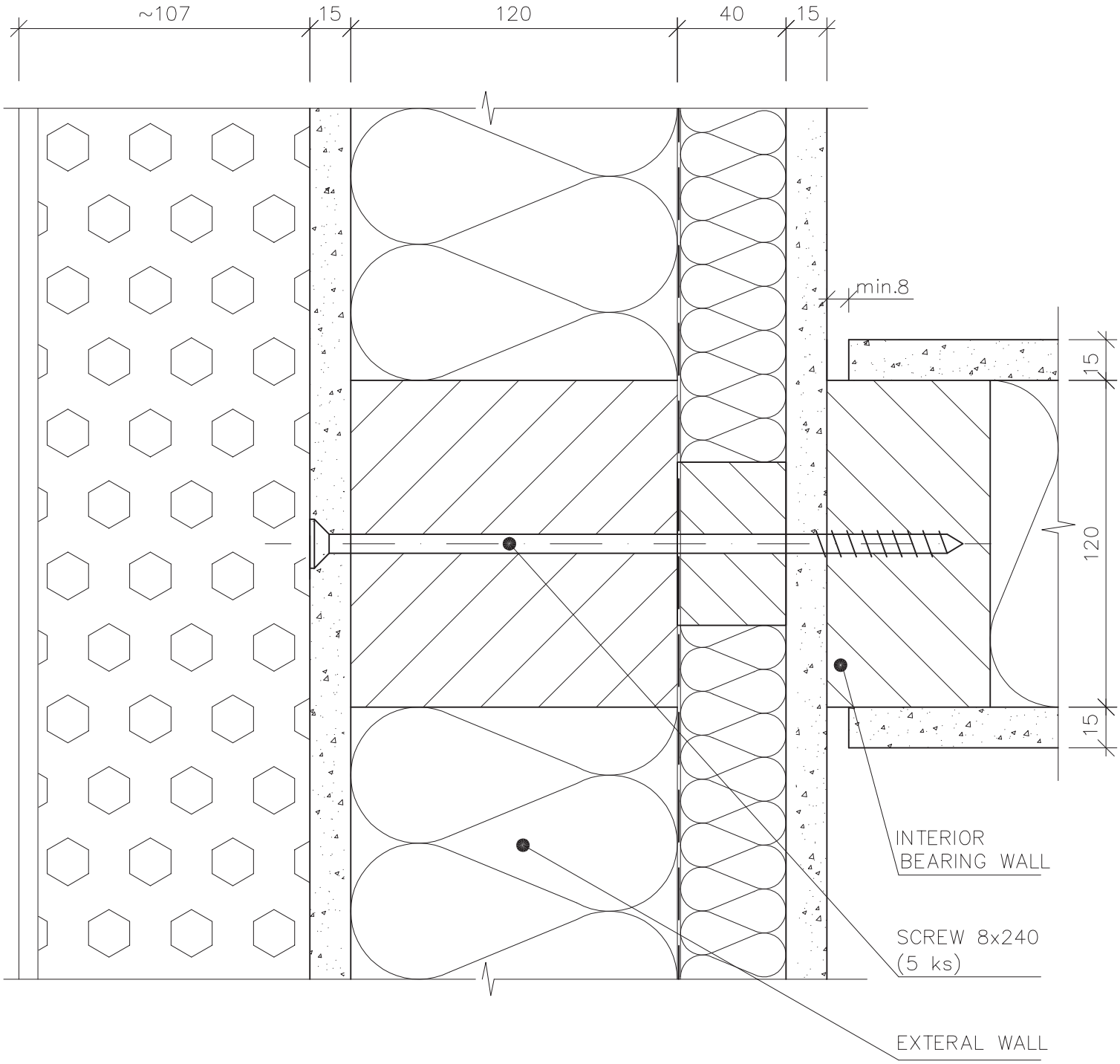

Scale applies to original 1:2	Remark: DETACHED HOUSE		Date				
	Worked out by:	Ing. Pavel Krupa	09/07	Alternation	Date	Signature	Index x
	Authorized by:	Tomáš Jánošík	09/07				x x x x
RD RÝMAŘOV	Type: INTERIOR BEARING WALL						
	CONNECTION WITH THE EXTERAL WALL						RD C 114

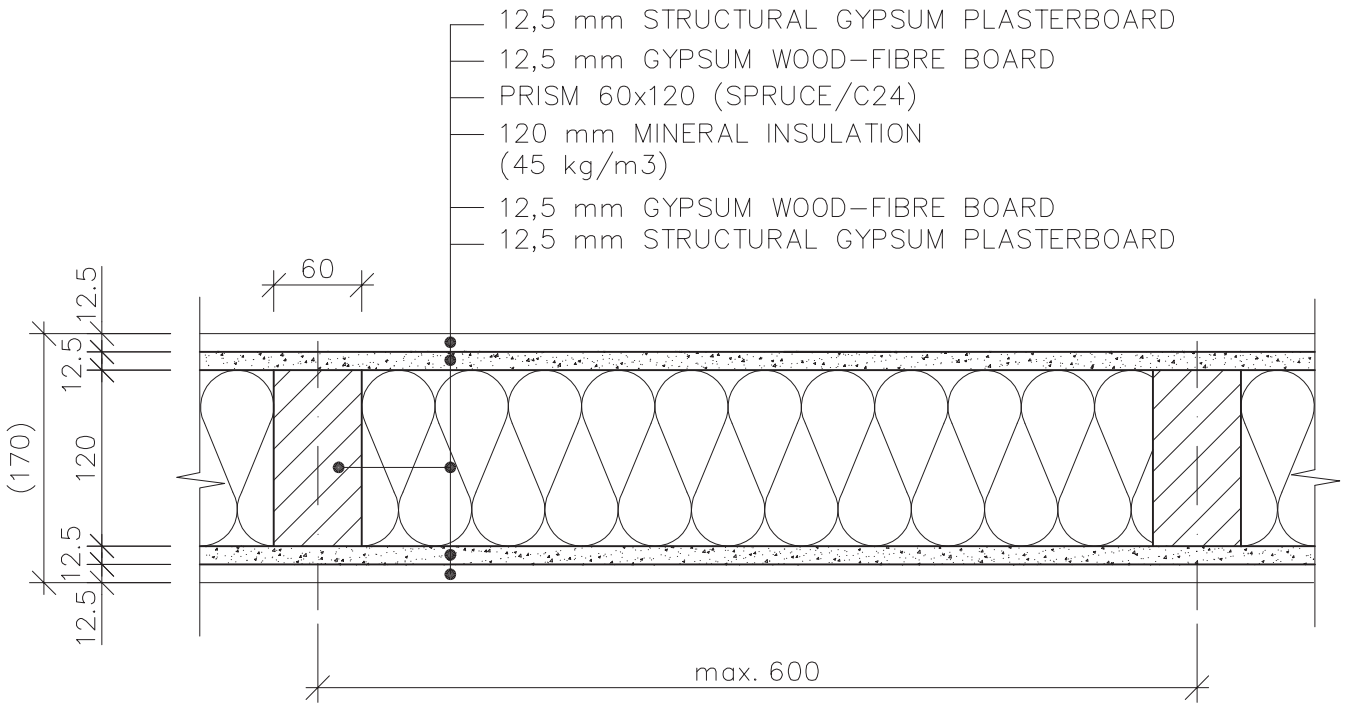

Scale applies to original 1:5	Remark: DETACHED HOUSE		Date				
	Worked out by:	Novotný Michal	01/06	Alternation	Date	Signature	Index x x x x x
	Authorized by:						
	Type: INTERIOR UNBEARING WALL TL. 170						
RD RÝMAŘOV	HORIZONTAL SECTIONAL VIEW					RD C 201	

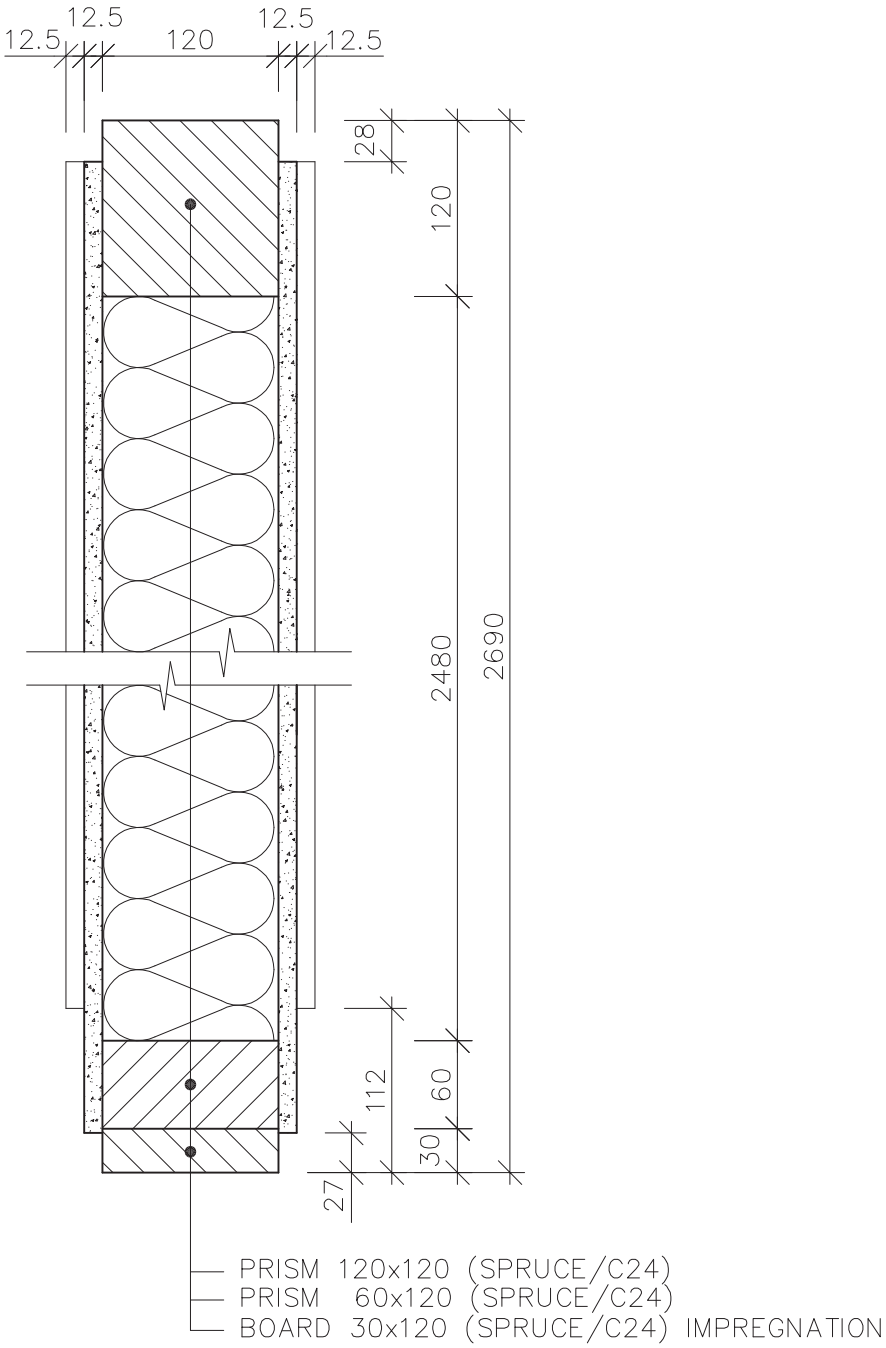

Scale applies to original 1:5	Remark: DETACHED HOUSE		Date				
	Worked out by:	Novotný Michal	01/06	Alternation	Date	Signature	Index
	Authorized by:						
	Type: INTERIOR UNBEARING WALL TL. 170						
RD RÝMAŘOV	VERTICAL SECTIONAL VIEW				RD C 202		

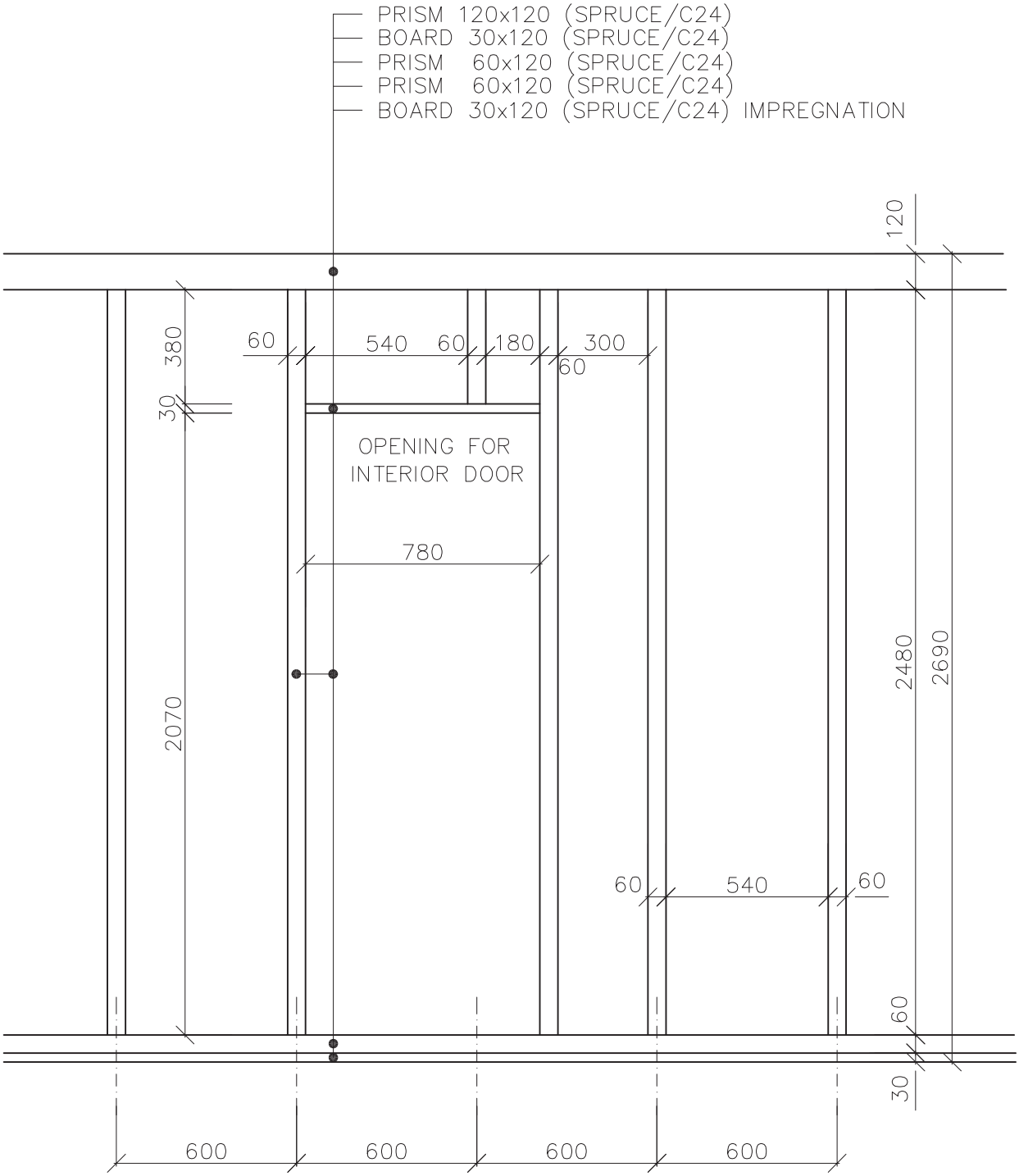

Scale applies to original 1:20	Remark: DETACHED HOUSE		Date				
	Worked out by:	Novotný Michal	01/06	Alternation	Date	Signature	Index x x x x x
	Authorized by:						
RD RÝMAŘOV	Type: INTERIOR UNBEARING WALL TL. 170						
	VIEW OF THE FRAME						RD C 203

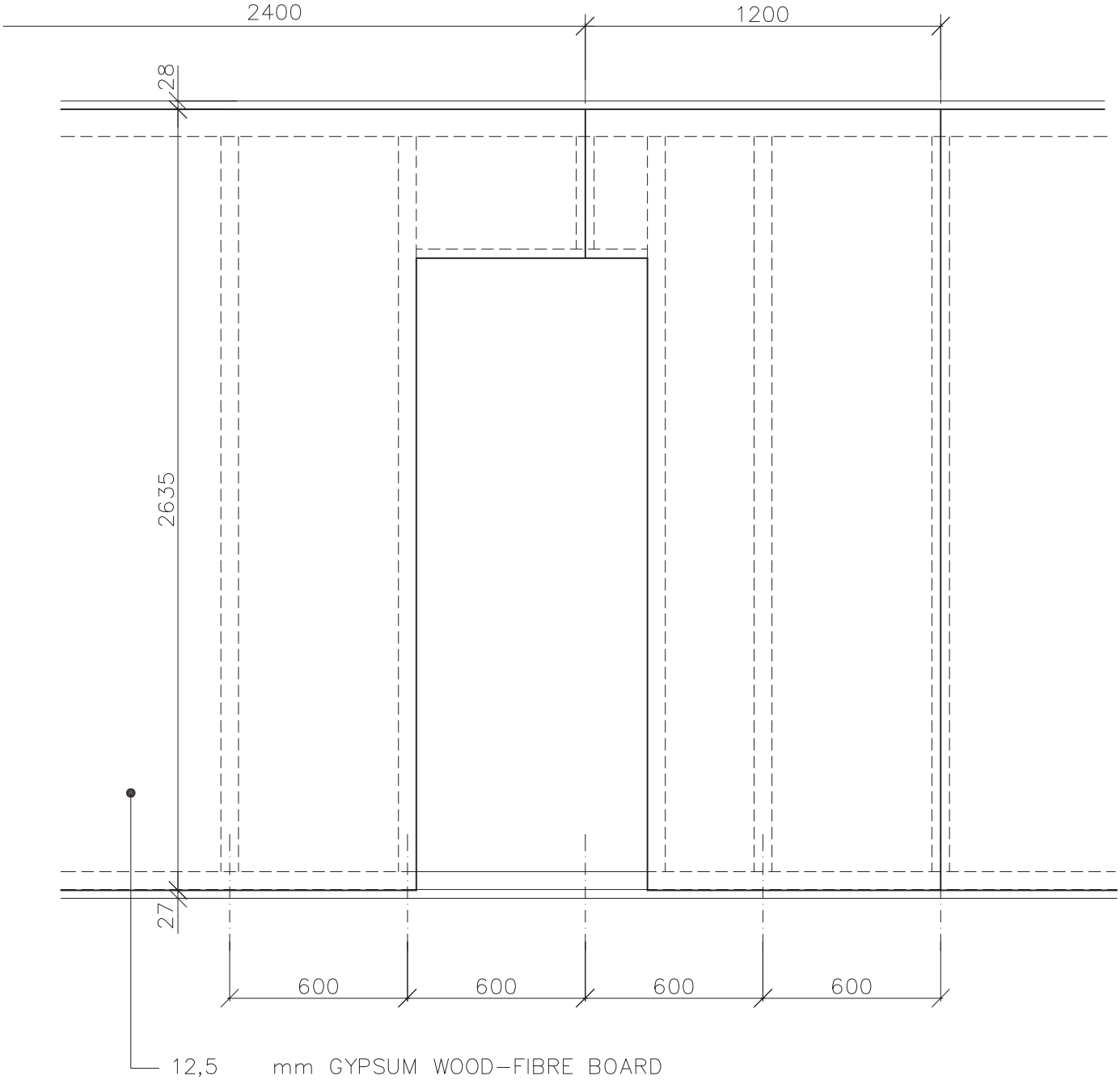

Scale applies to original 1:20	Remark: DETACHED HOUSE		Date				
	Worked out by:	Novotný Michal	01/06	Alternation	Date	Signature	Index
	Authorized by:						x x x x x
RD RÝMAŘOV	Type: INTERIOR UNBEARING WALL TL. 170						
	VIEW OF THE SHEATHING						RD C 204

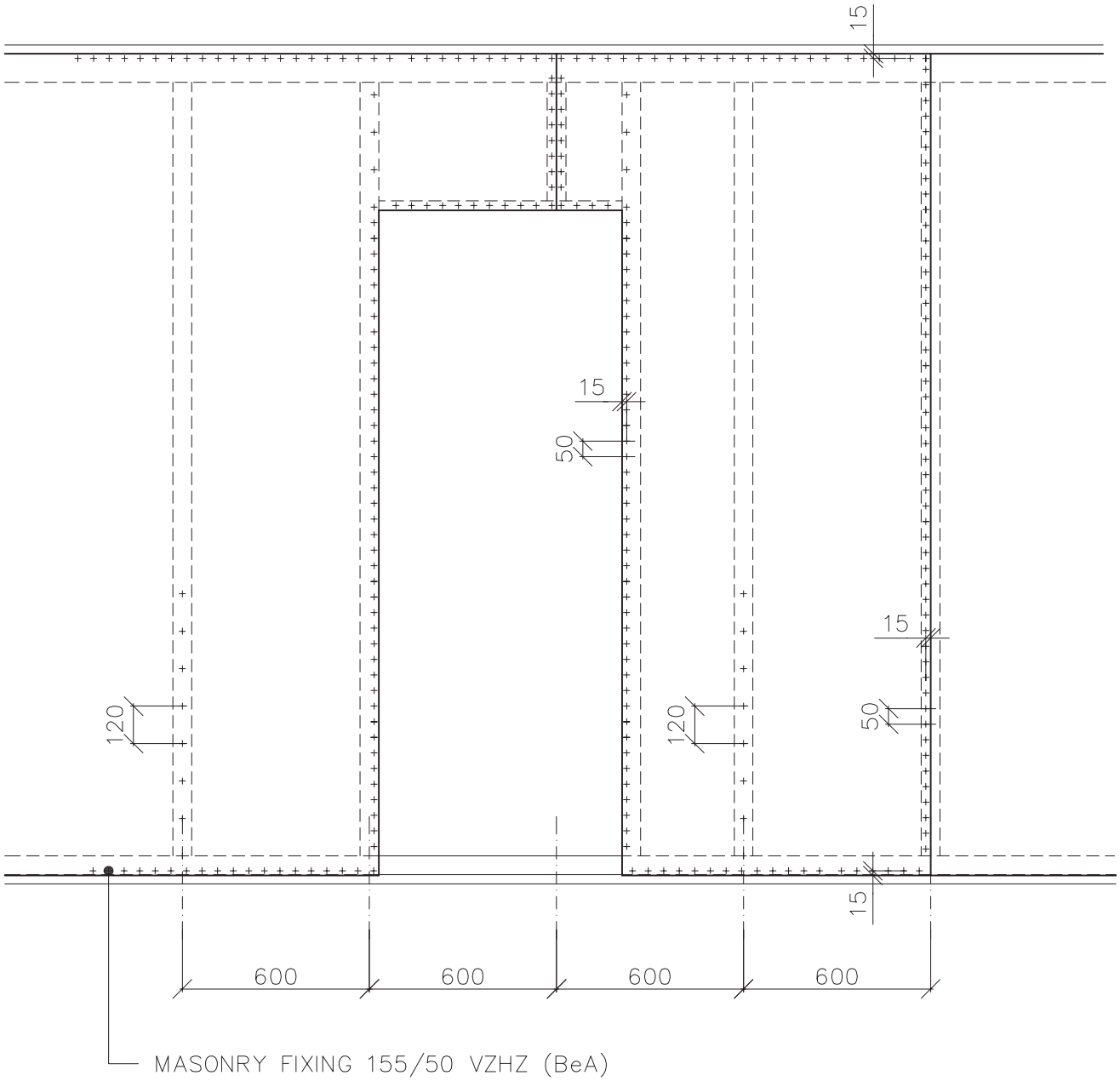

Scale applies to original 1:20	Remark: DETACHED HOUSE		Date				
	Worked out by:	Novotný Michal	01/06	Alternation	Date	Signature	Index
	Authorized by:						x x x x x
RD RÝMAŘOV	Type: INTERIOR UNBEARING WALL TL. 170						
	FIXATION OF THE SHEATING ON THE FRAME						RD C 205

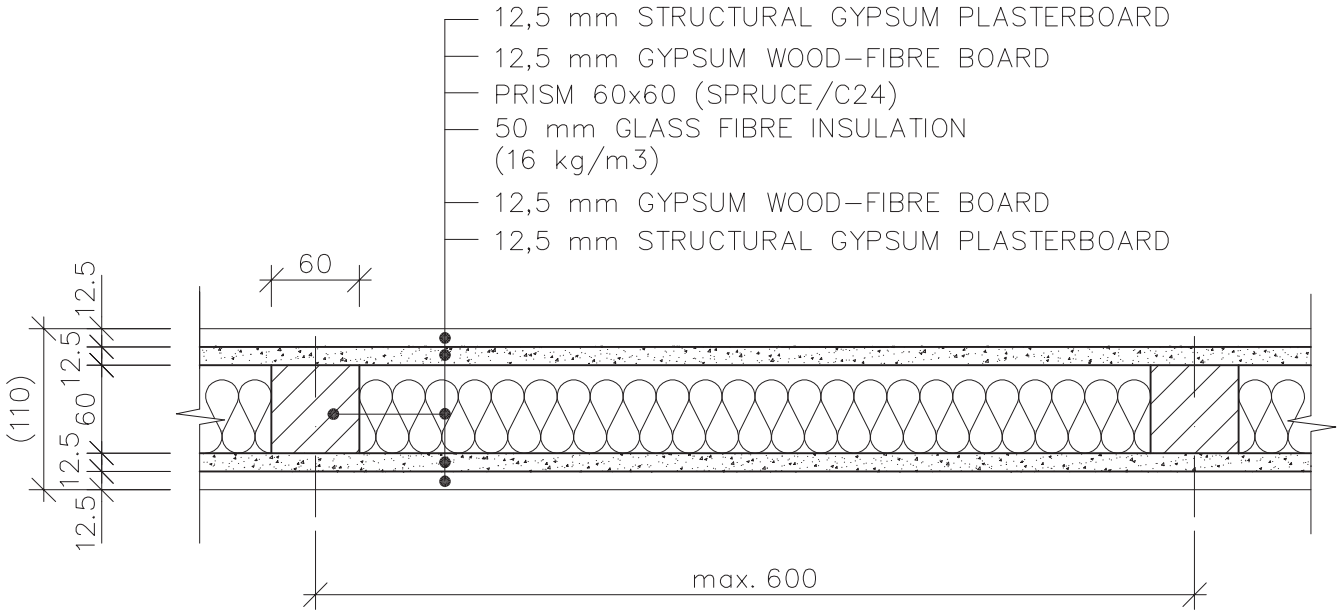

Scale applies to original 1:5	Remark: DETACHED HOUSE		Date				
	Worked out by:	Novotný Michal	01/06	Alternation	Date	Signature	Index x x x x x
	Authorized by:						
	Type: DIVIDING WALL GROUND FLOOR TL. 110						
RD RÝMAŘOV	HORIZONTAL SECTIONAL VIEW					RD C 211	

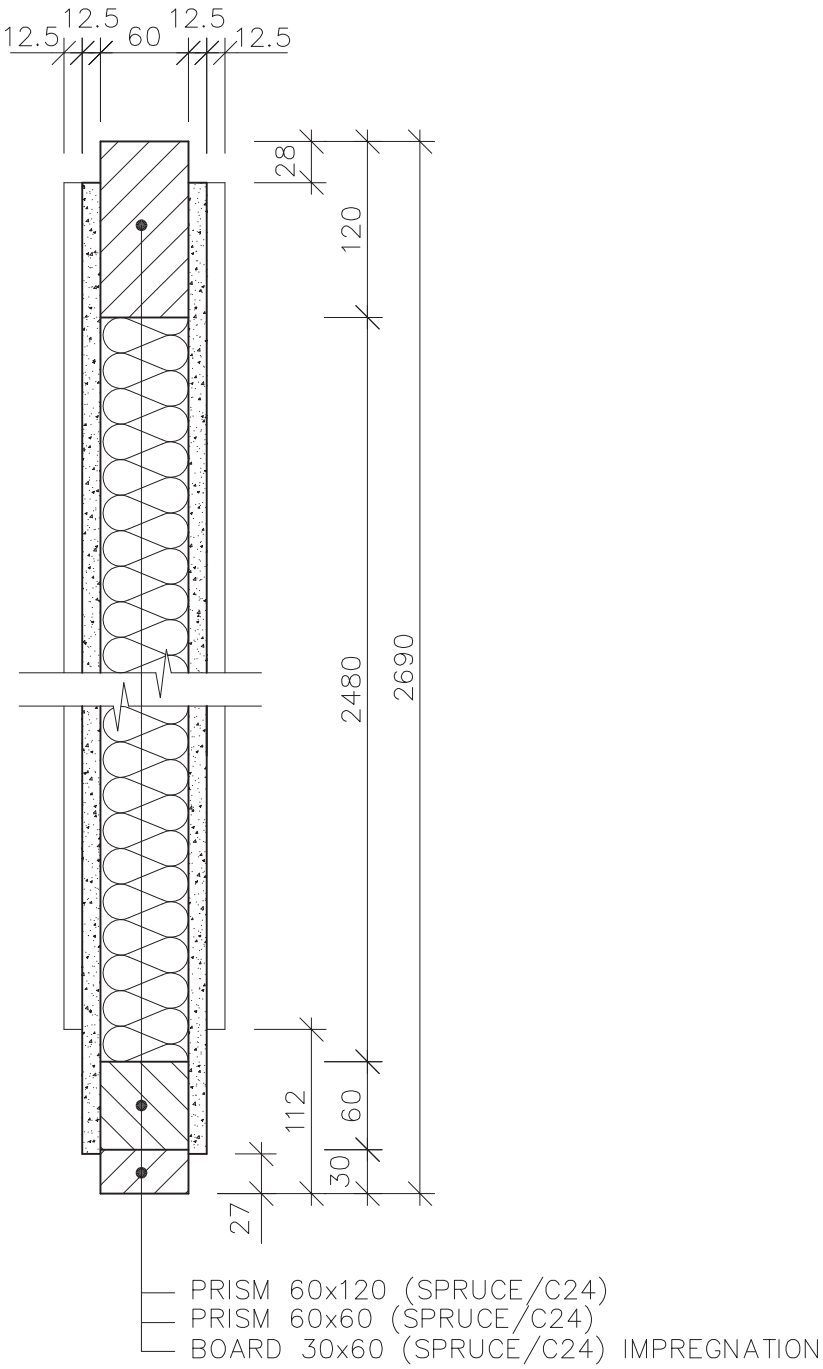

Scale applies to original 1:5	Remark: DETACHED HOUSE		Date				
	Worked out by:	Novotný Michal	01/06	Alternation	Date	Signature	Index x x x x x
	Authorized by:						
RD RÝMAŘOV	Type: DIVIDING WALL GROUND FLOOR TL. 110						
	VERTICAL SECTIONAL VIEW						RD C 212

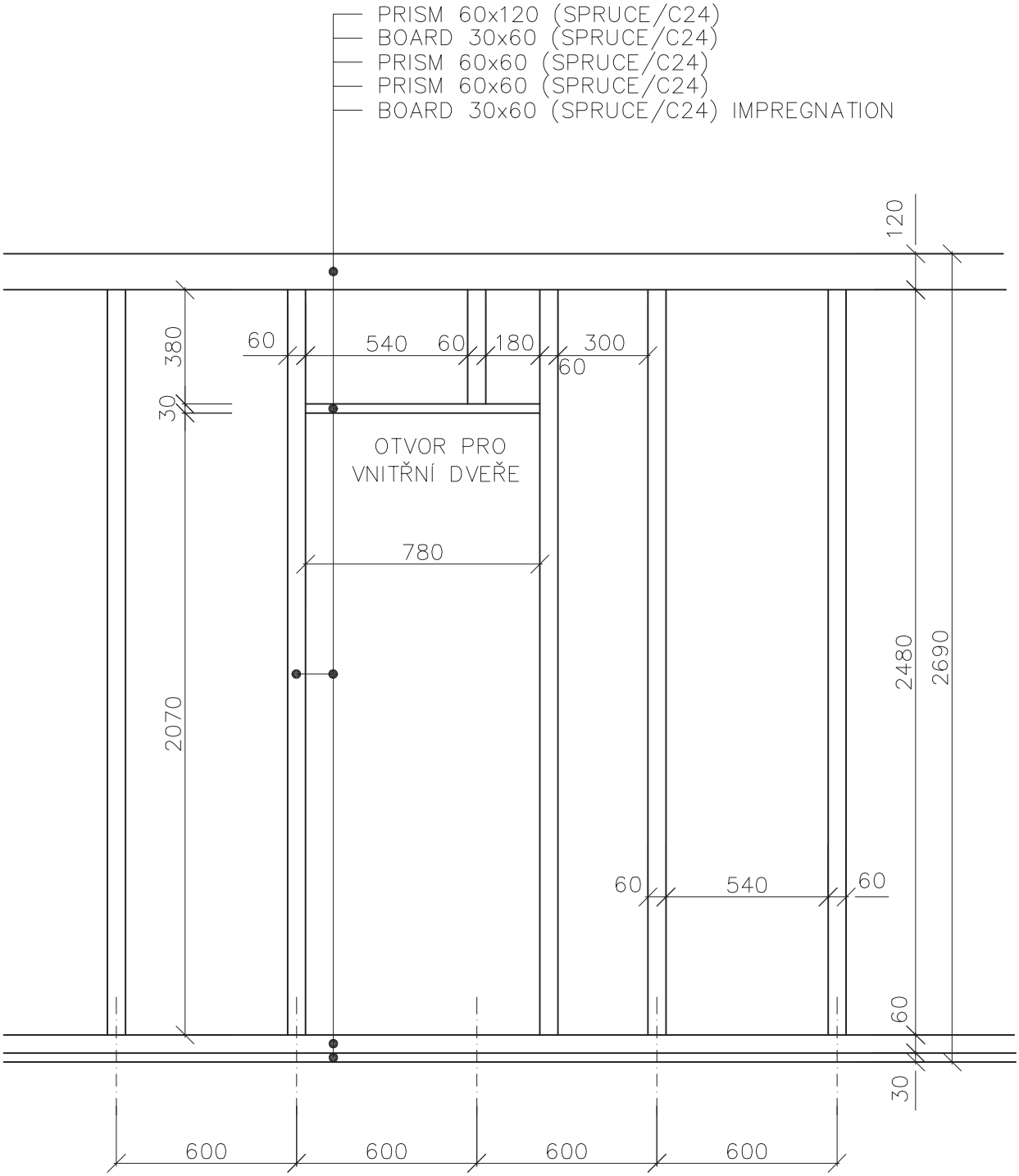

Scale applies to original 1:20	Remark: DETACHED HOUSE		Date				
	Worked out by:	Novotný Michal	01/06	Alternation	Date	Signature	Index x x x x x
	Authorized by:						
RD RÝMAŘOV	Type: DIVIDING WALL GROUND FLOOR TL. 110						
	VIEW OF THE FRAME						RD C 213

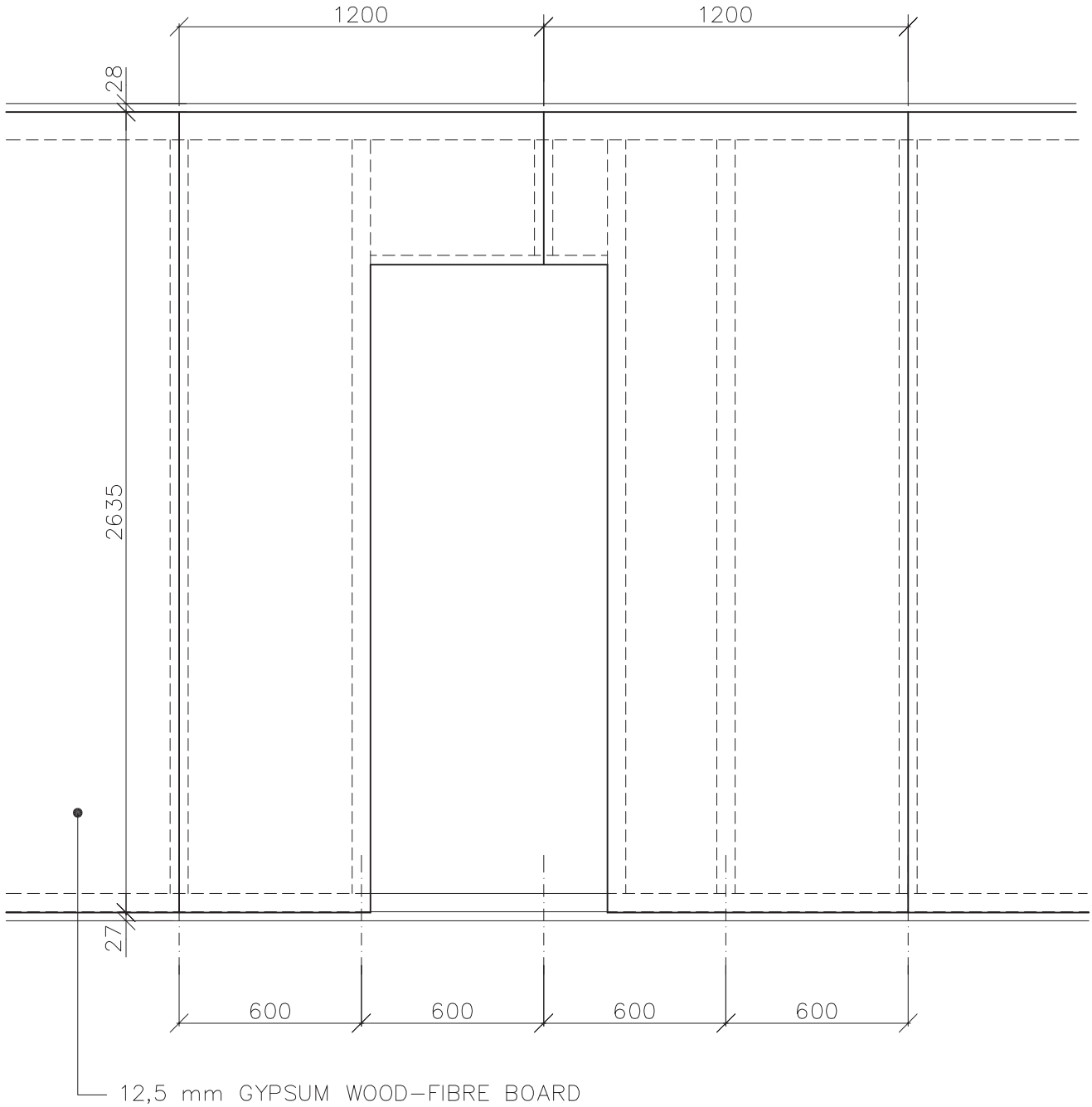

Scale applies to original 1:20	Remark: DETACHED HOUSE		Date				
	Worked out by:	Novotný Michal	01/06	Alternation	Date	Signature	Index
	Authorized by:						
	Type: DIVIDING WALL GROUND FLOOR TL. 110						
RD RÝMAŘOV	VIEW OF THE SHEATHING						RD C 214

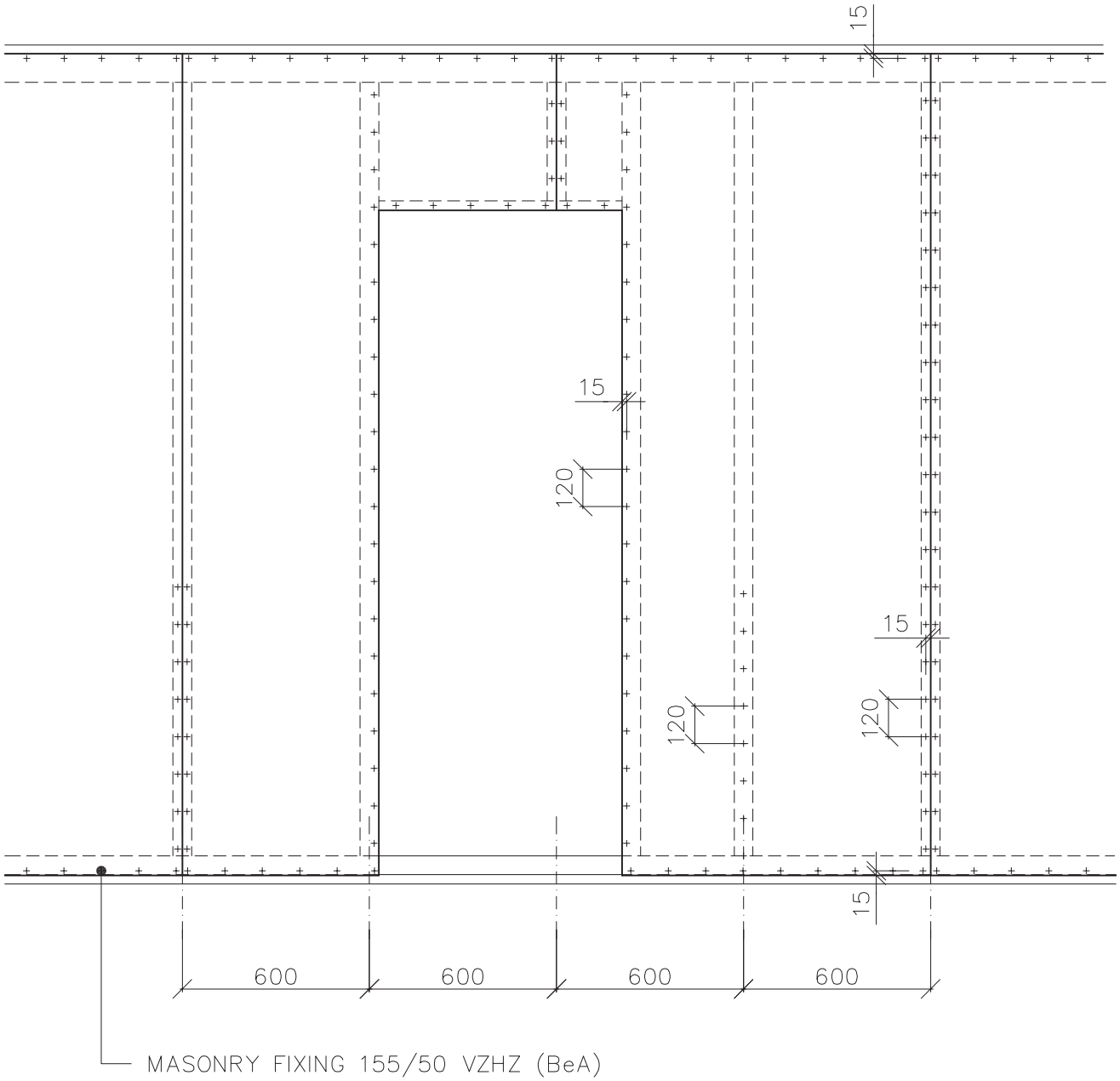

Scale applies to original 1:20	Remark: DETACHED HOUSE		Date				
	Worked out by:	Novotný Michal	01/06	Alternation	Date	Signature	Index
	Authorized by:						x x x x x
RD RÝMAŘOV	Type: DIVIDING WALL GROUND FLOOR TL. 110						
	FIXATION OF THE SHEATING ON THE FRAME						RD C 215

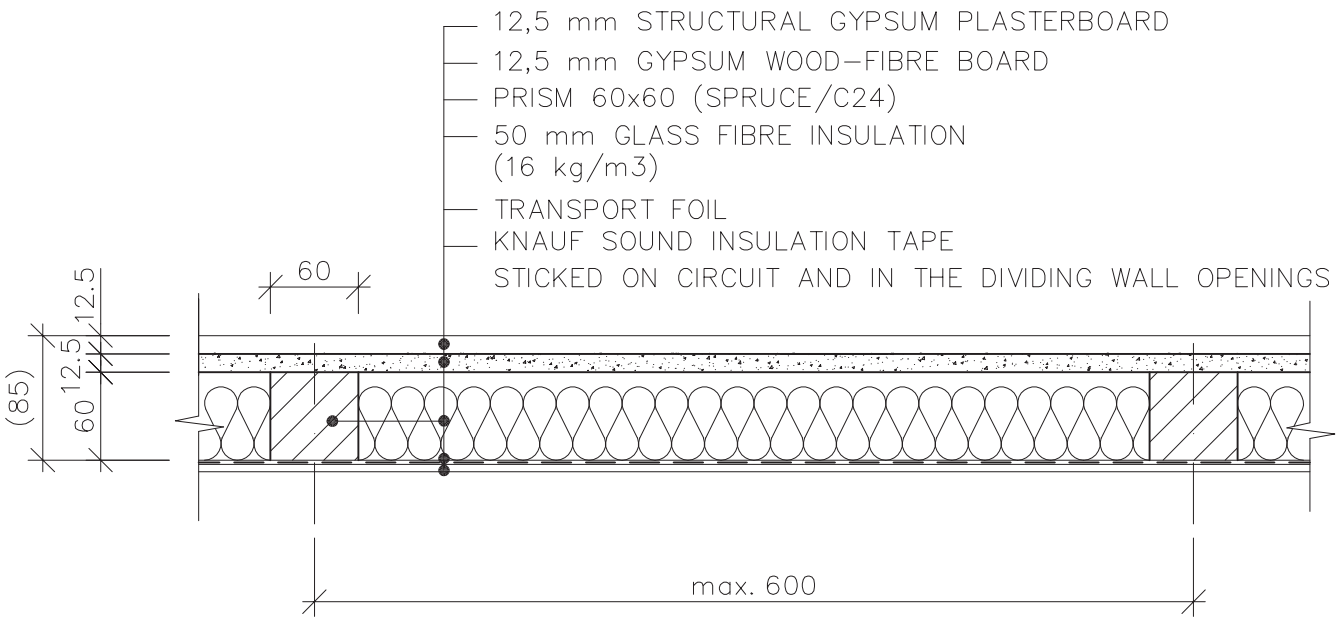

Scale applies to original 1:5	Remark: DETACHED HOUSE		Date				
	Worked out by:	Novotný Michal	01/06	Alternation	Date	Signature	Index x x x x x
	Authorized by:						
RD RÝMAŘOV	Type: DIVIDING WALL GROUND FLOOR TL. 85 INSTALLATION–Rw						
	HORIZONTAL SECTIONAL VIEW						RD C 221

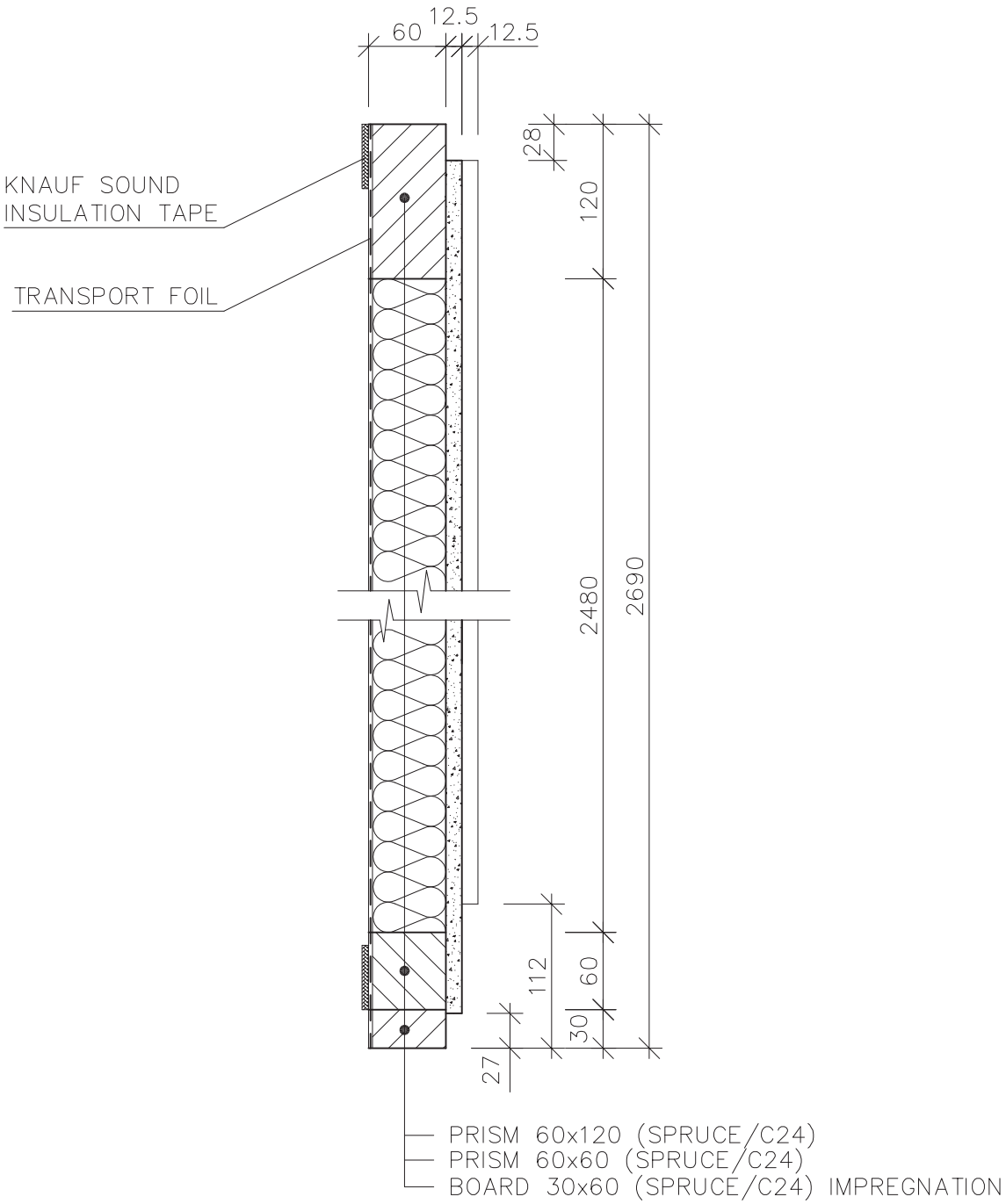

Scale applies to original 1:5	Remark: DETACHED HOUSE		Date				
	Worked out by:	Novotný Michal	01/06	Alternation	Date	Signature	Index x x x x x
	Authorized by:						
RD RÝMAŘOV	Type: DIVIDING WALL GROUND FLOOR TL. 85 INSTALLATION–Rw						
	VERTICAL SECTIONAL VIEW					RD C 222	

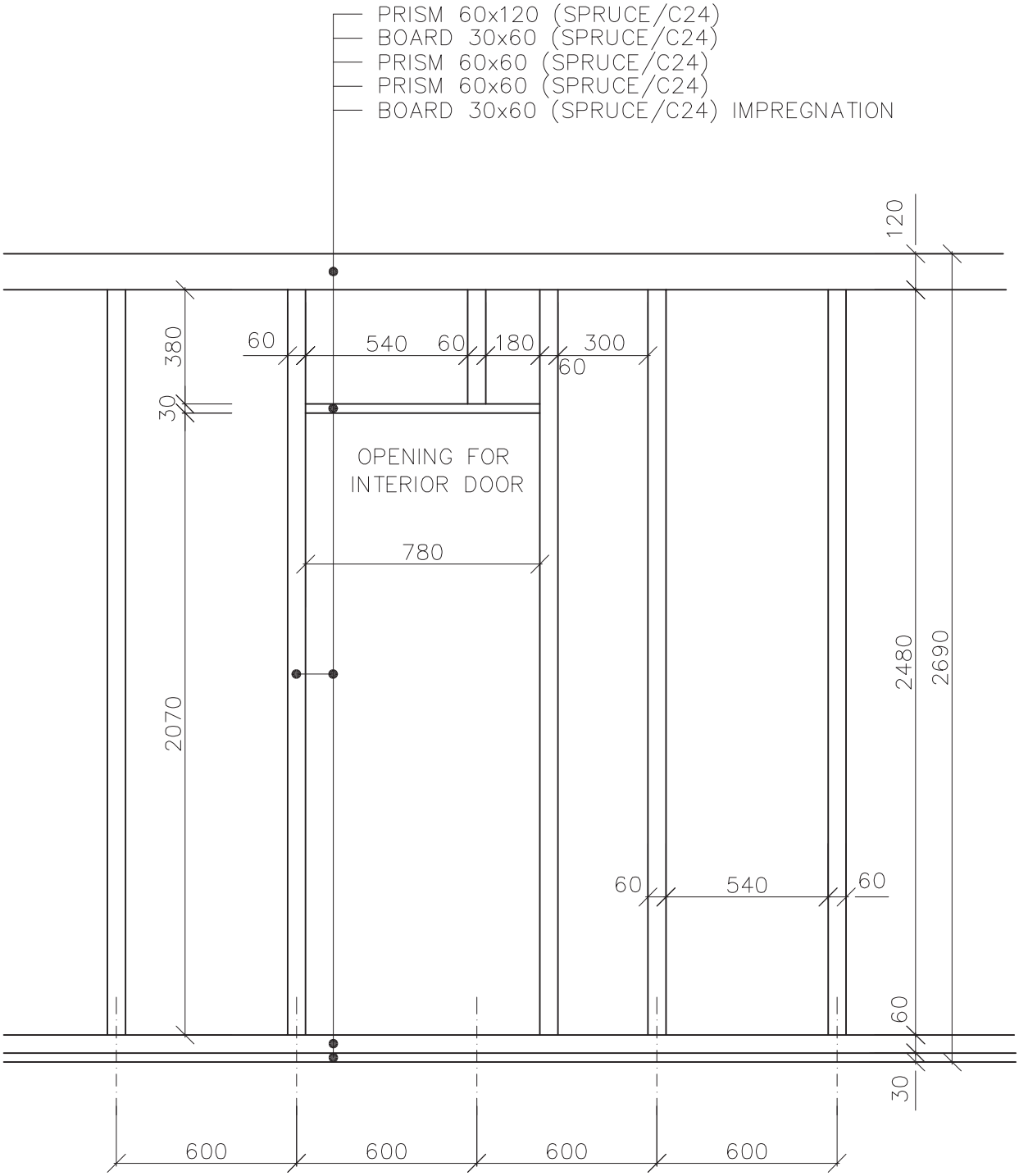

Scale applies to original 1:20	Remark: DETACHED HOUSE		Date				
	Worked out by:	Novotný Michal	01/06	Alternation	Date	Signature	Index x x x x x
	Authorized by:						
	Type: DIVIDING WALL GROUND FLOOR TL. 85 INSTALLATION–Rw						
RD RÝMAŘOV	VIEW OF THE FRAME					RD C 223	

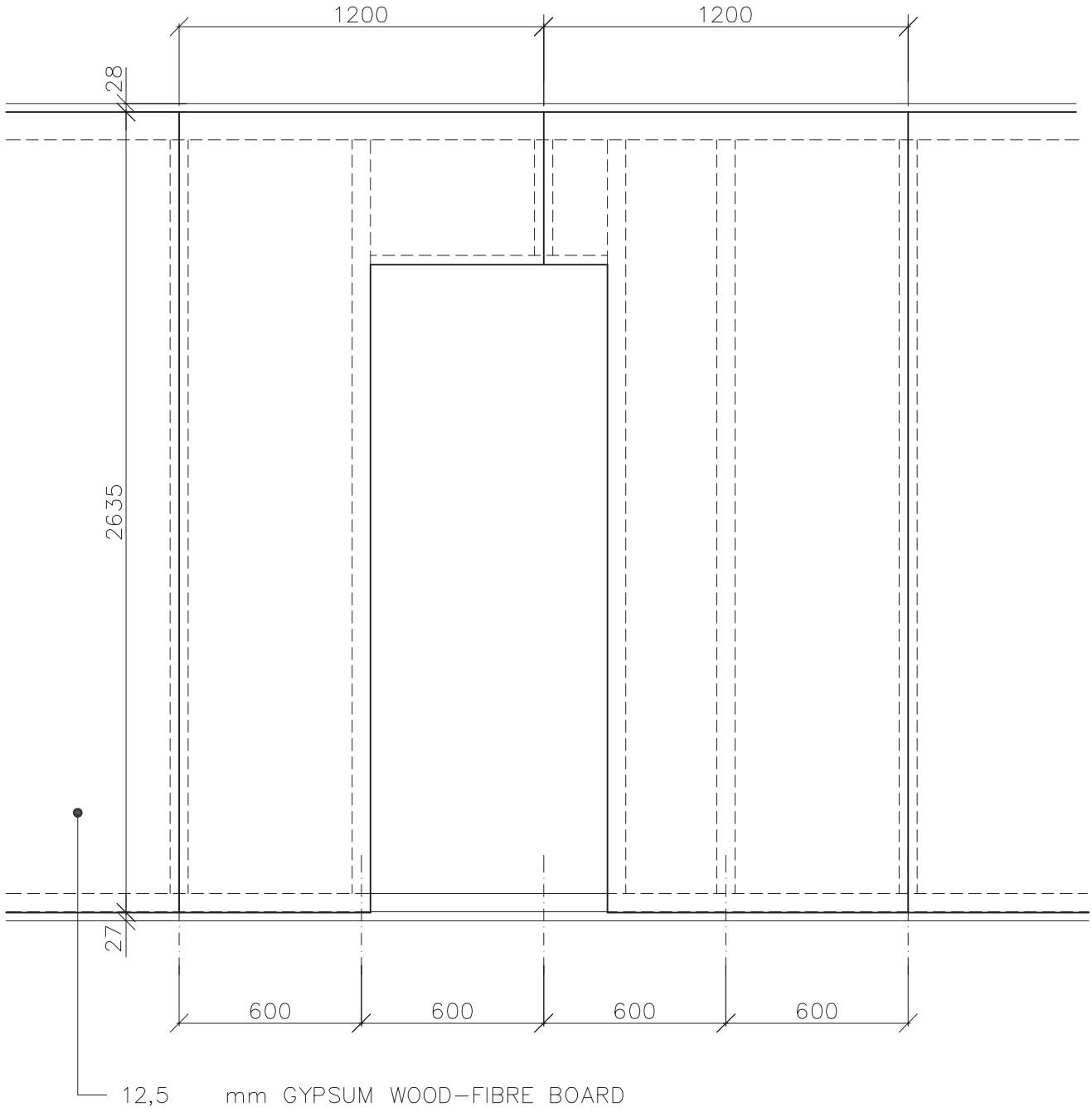

Scale applies to original 1:20	Remark: DETACHED HOUSE		Date				
	Worked out by:	Novotný Michal	01/06	Alternation	Date	Signature	Index x x x x x
	Authorized by:						
	Type: DIVIDING WALL GROUND FLOOR TL. 85 INSTALLATION-Rw						
RD RÝMAŘOV	VIEW OF THE SHEATHING					RD C 224	

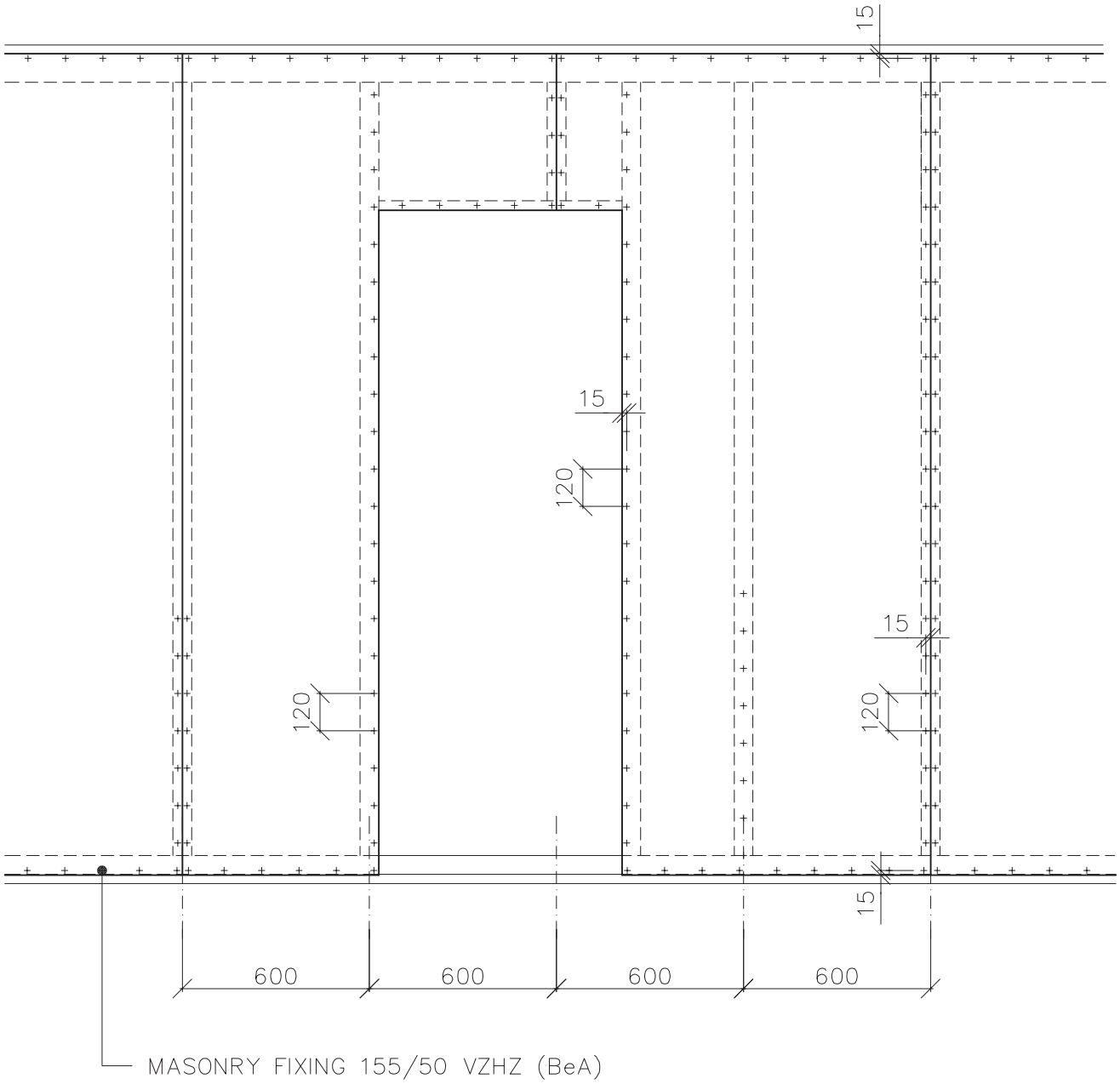

Scale applies to original 1:20	Remark: DETACHED HOUSE		Date				
	Worked out by:	Novotný Michal	01/06	Alternation	Date	Signature	Index x x x x x
	Authorized by:						
	Type: DIVIDING WALL GROUND FLOOR TL. 85 INSTALLATION–Rw						
RD RÝMAŘOV	FIXATION OF THE SHEATING ON THE FRAME			RD C 225			

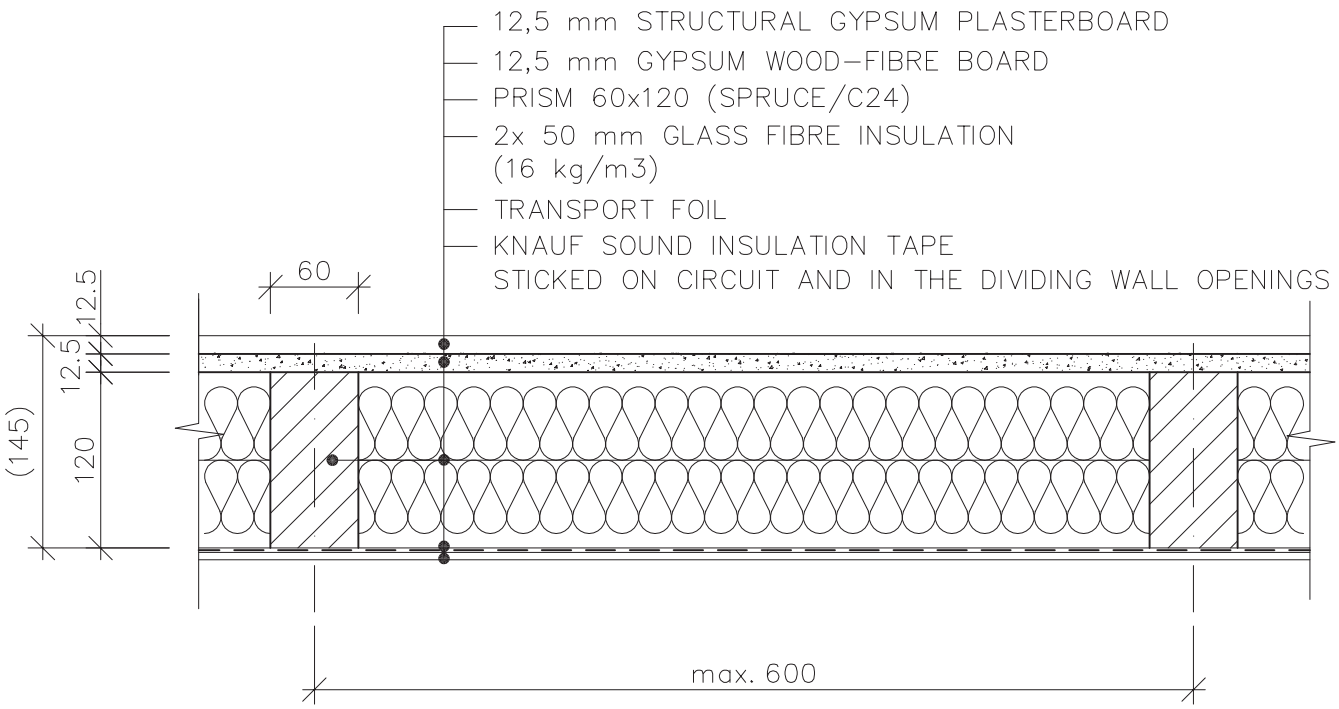

Scale applies to original 1:5	Remark: DETACHED HOUSE		Date				
	Worked out by:	Novotný Michal	01/06	Alternation	Date	Signature	Index x x x x x
	Authorized by:						
	Type: DIVIDING WALL GROUND FLOOR TL. 145 INSTALLATION–Rw						
RD RÝMAŘOV	HORIZONTAL SECTIONAL VIEW					RD C 231	

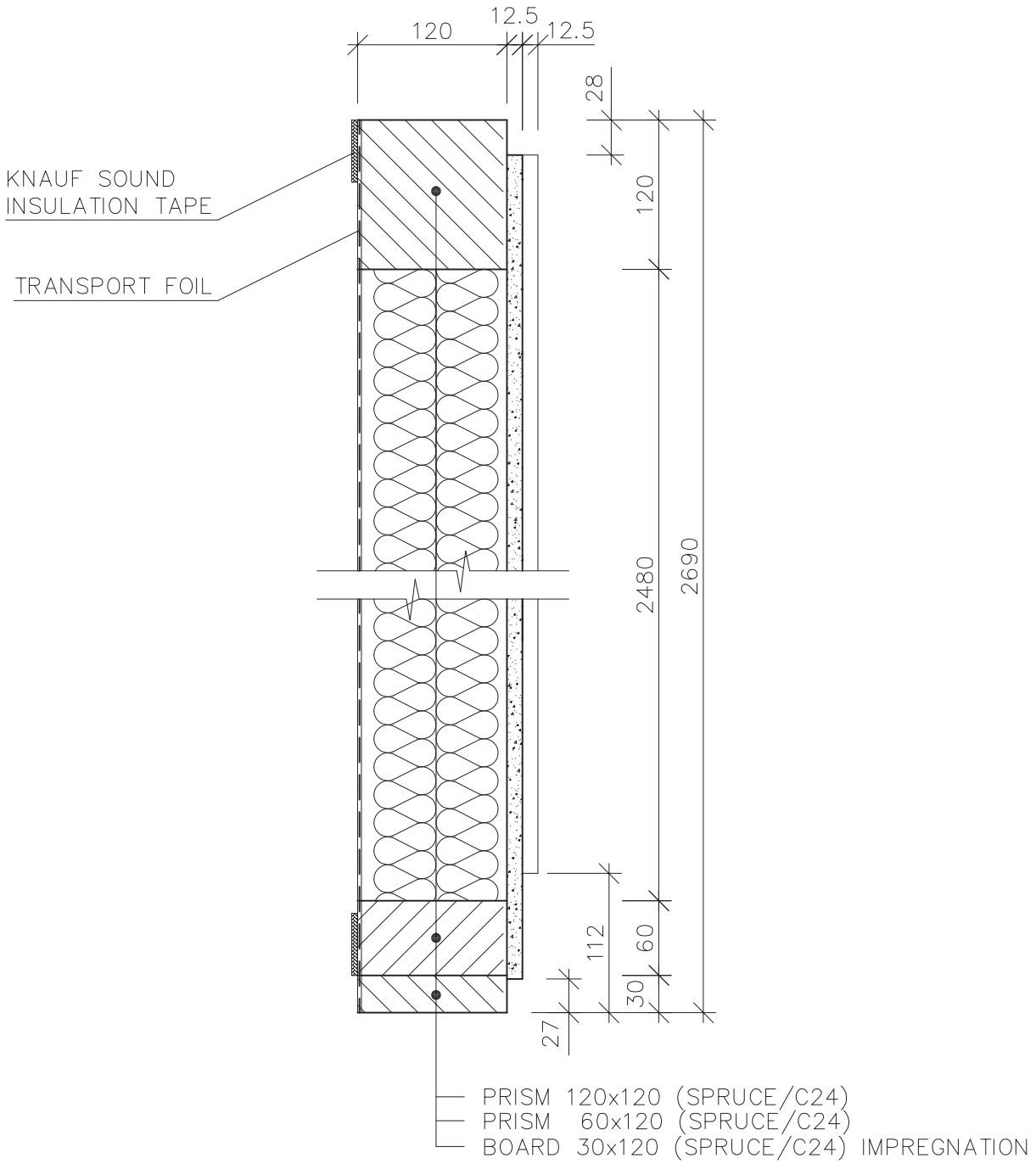

Scale applies to original 1:5	Remark: DETACHED HOUSE		Date				
	Worked out by:	Novotný Michal	01/06	Alternation	Date	Signature	Index x x x x x
	Authorized by:						
RD RÝMAŘOV	Type: DIVIDING WALL GROUND FLOOR TL. 145 INSTALLATION–Rw						
	VERTICAL SECTIONAL VIEW					RD C 232	

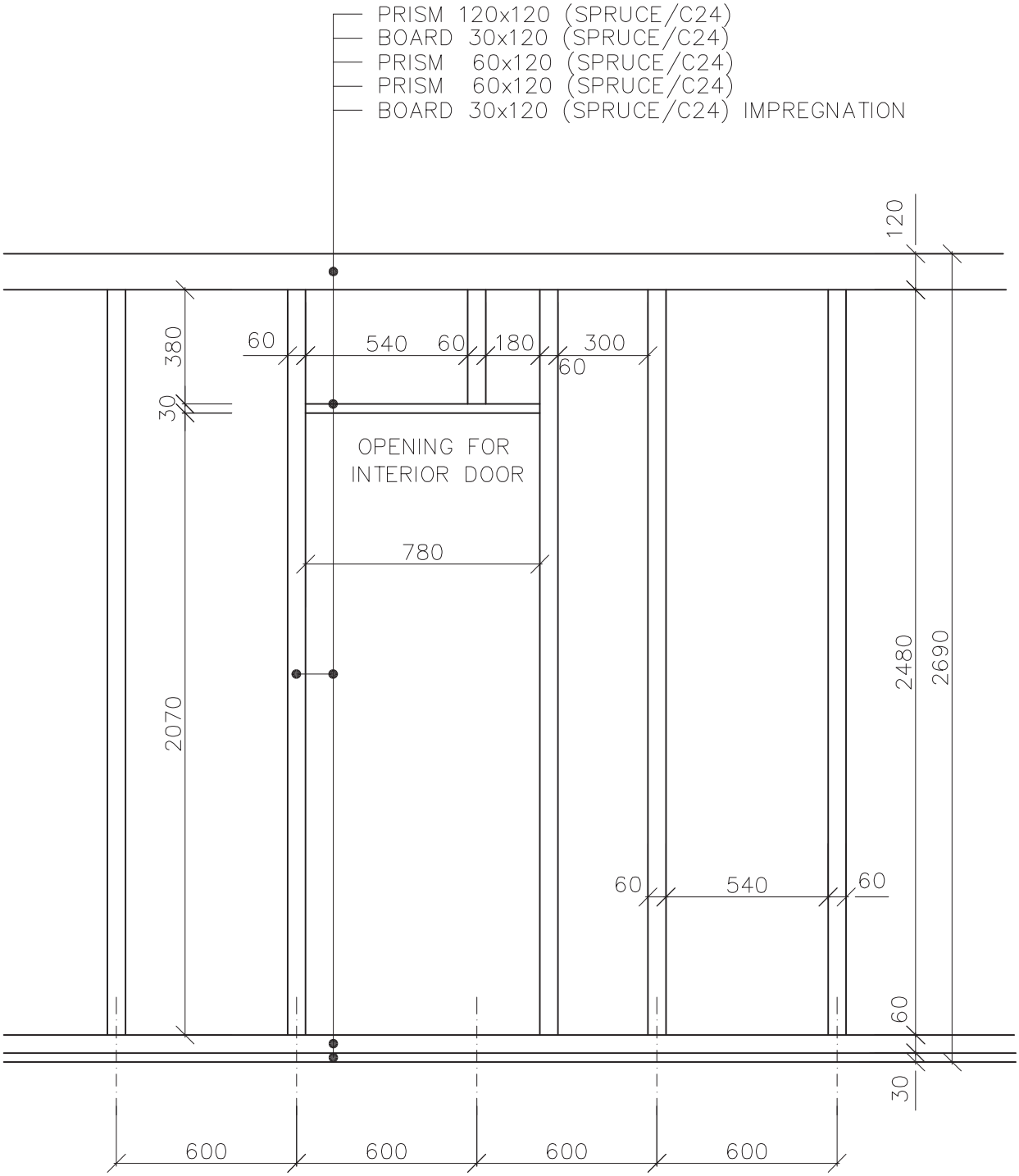

Scale applies to original 1:20	Remark: DETACHED HOUSE		Date				
	Worked out by:	Novotný Michal	01/06	Alternation	Date	Signature	Index x x x x x
	Authorized by:						
RD RÝMAŘOV	Type: DIVIDING WALL GROUND FLOOR TL. 145 INSTALLATION-Rw						
	VIEW OF THE FRAME						RD C 233

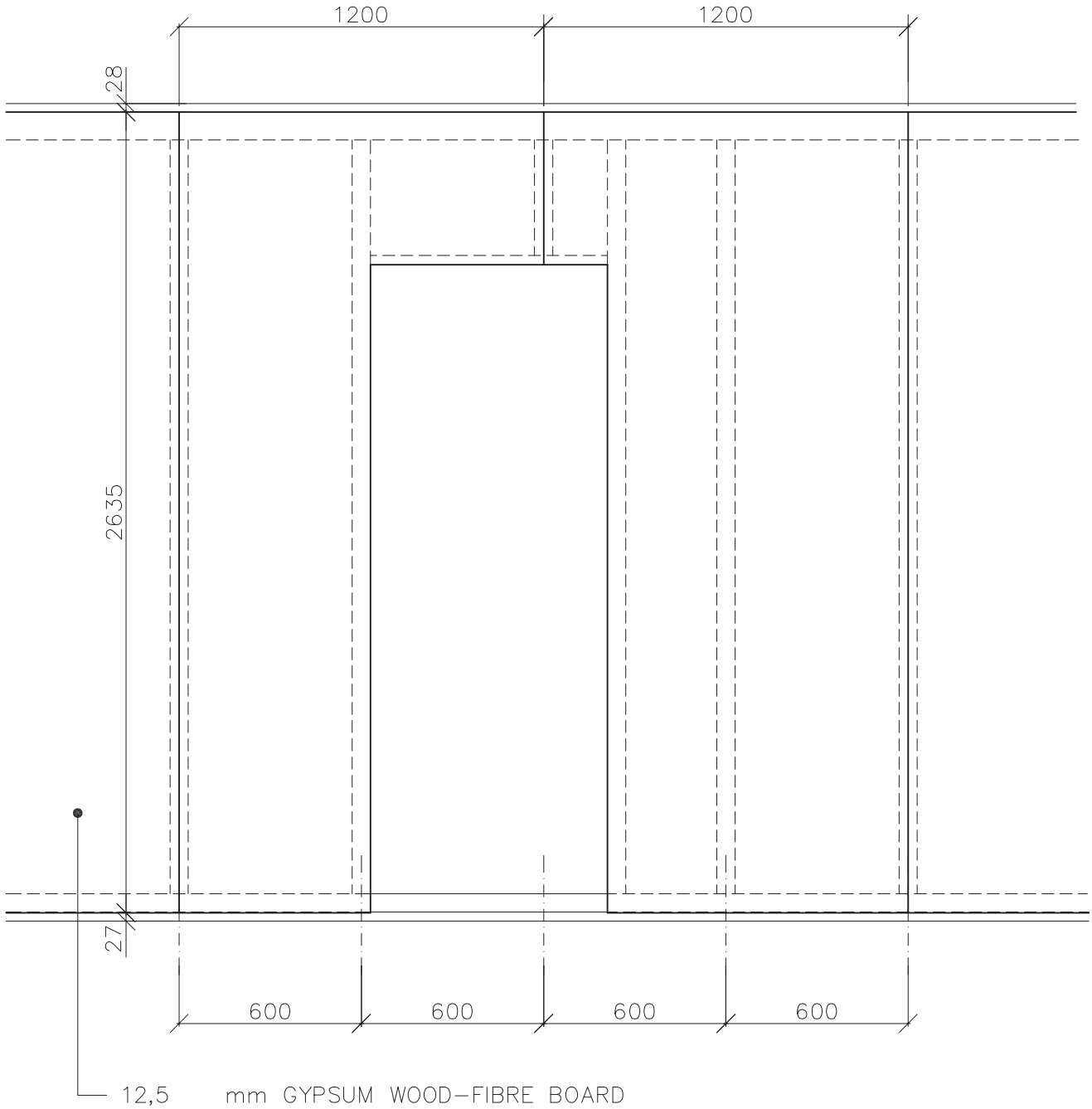

Scale applies to original 1:20	Remark: DETACHED HOUSE		Date				
	Worked out by:	Novotný Michal	01/06	Alternation	Date	Signature	Index x x x x x
	Authorized by:						
	Type: DIVIDING WALL GROUND FLOOR TL. 145 INSTALLATION-Rw						
RD RÝMAŘOV	VIEW OF THE SHEATHING				RD C 234		

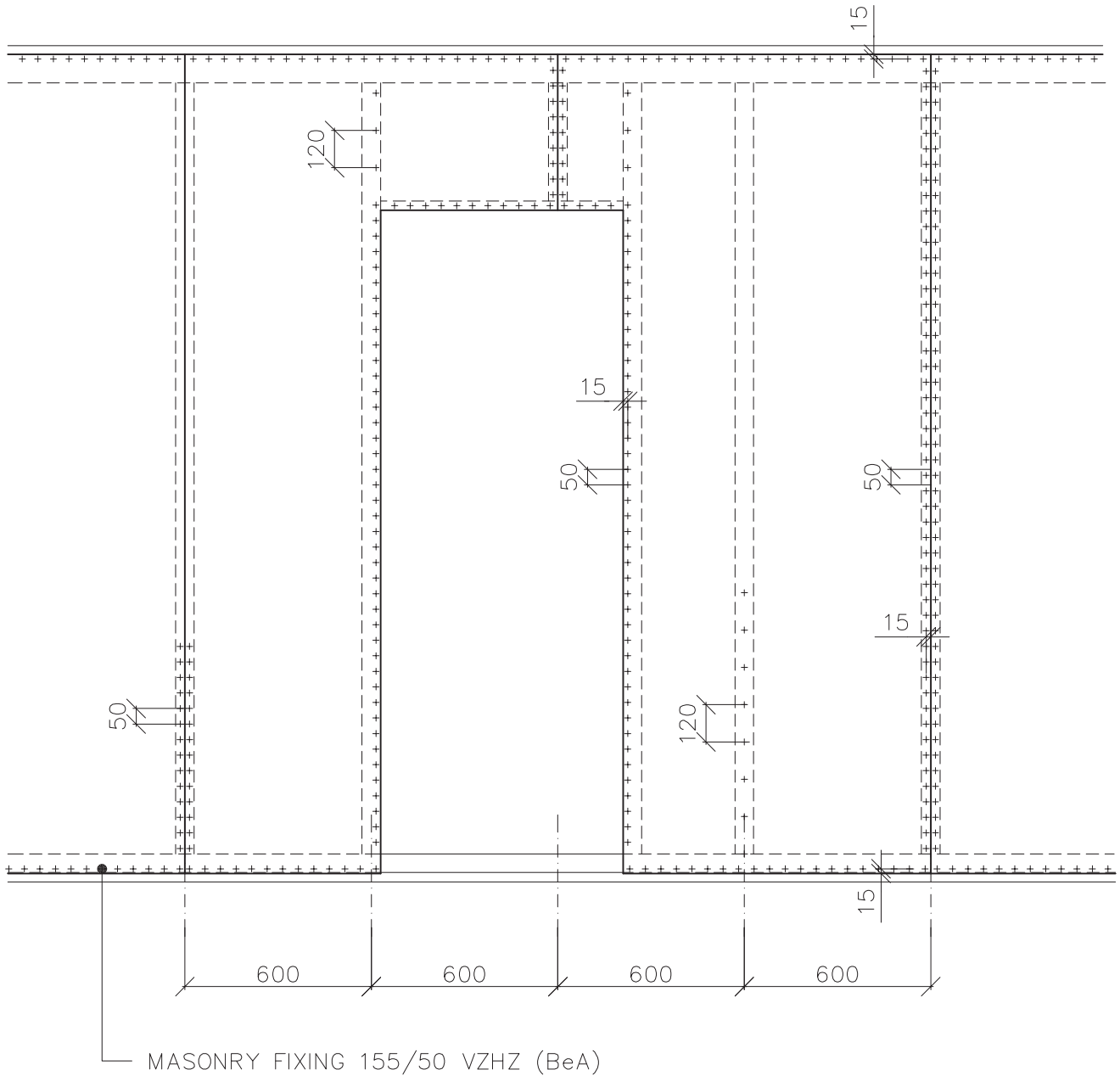

Scale applies to original 1:20	Remark: DETACHED HOUSE		Date				
	Worked out by:	Novotný Michal	01/06	Alternation	Date	Signature	Index x x x x x
	Authorized by:						
RD RÝMAŘOV	Type: DIVIDING WALL GROUND FLOOR TL. 145 INSTALLATION-Rw						
	FIXATION OF THE SHEATING ON THE FRAME						RD C 235

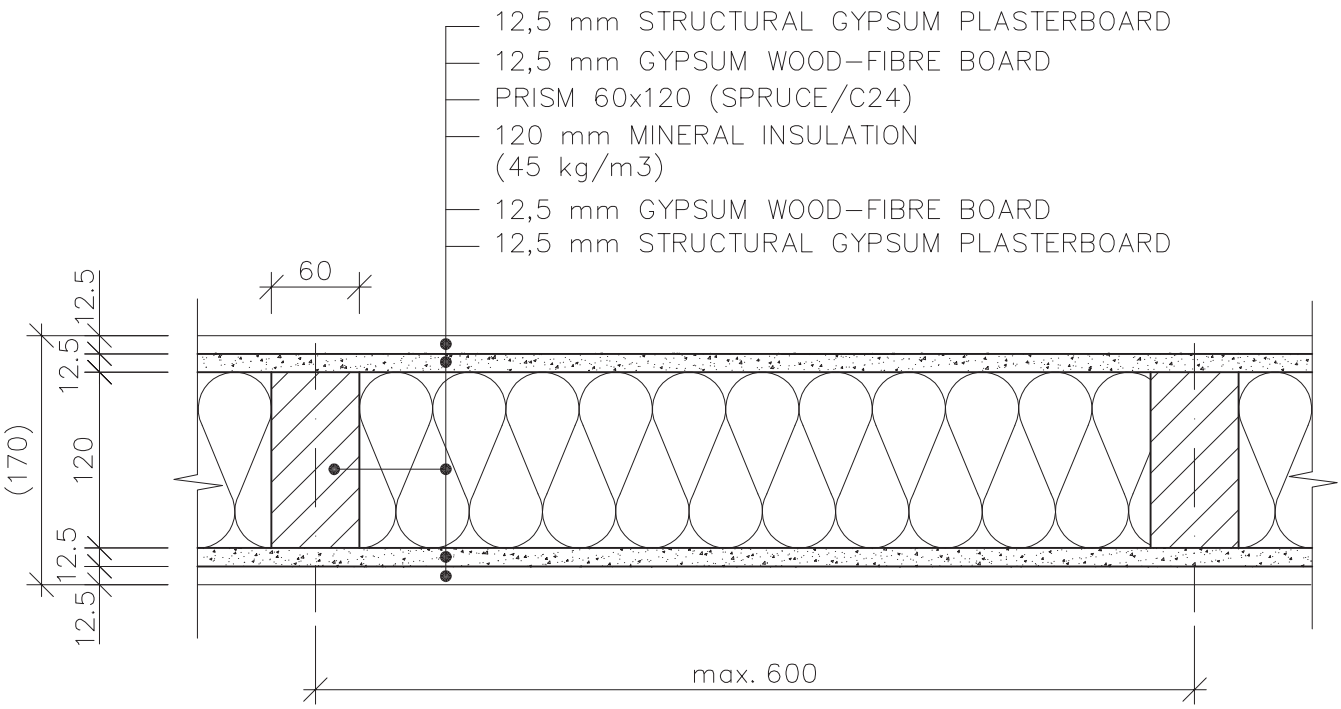

Scale applies to original 1:5	Remark: DETACHED HOUSE		Date				
	Worked out by:	Novotný Michal	01/06	Alternation	Date	Signature	Index x
	Authorized by:						x
							x
							x
							x
RD RÝMAŘOV	Type: DIVIDING WALL ATTIC TL. 170						
	HORIZONTAL SECTIONAL VIEW					RD C 241	

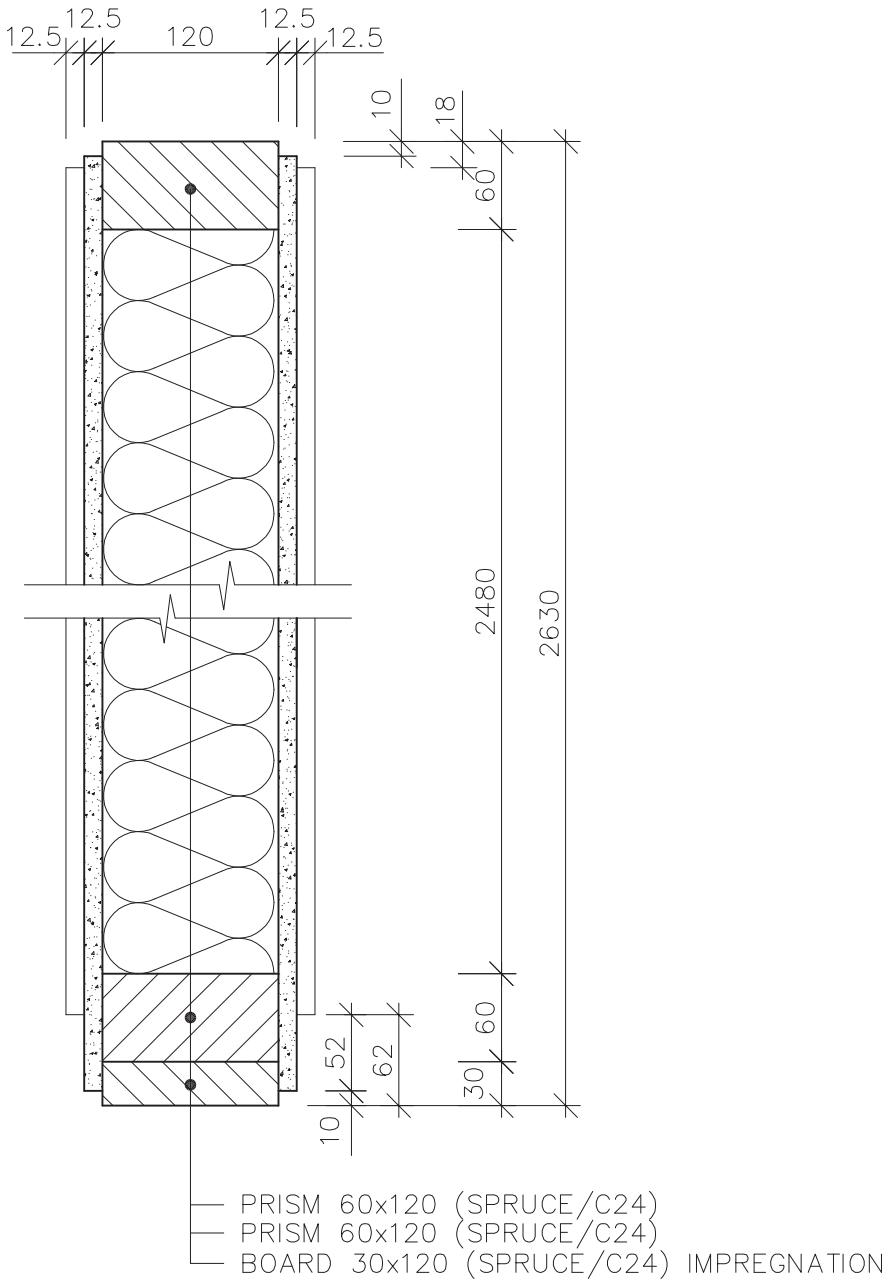

Scale applies to original 1:5	Remark: DETACHED HOUSE		Date				
	Worked out by:	Novotný Michal	01/06	Alternation	Date	Signature	Index x x x x x
	Authorized by:						
RD RÝMAŘOV	Type: DIVIDING WALL ATTIC TL. 170						
	VERTICAL SECTIONAL VIEW						RD C 242

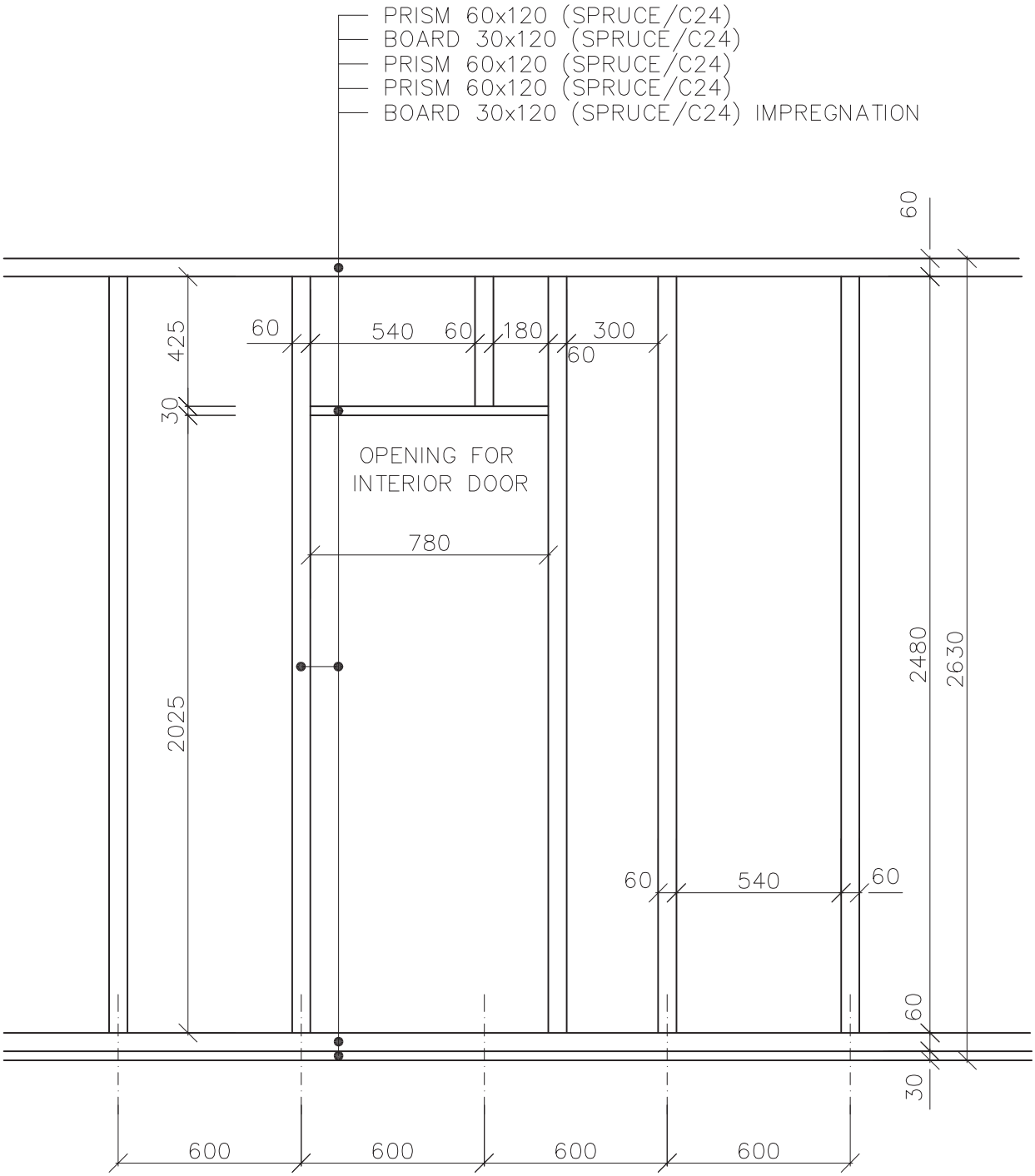

Scale applies to original 1:20	Remark: DETACHED HOUSE		Date				
	Worked out by:	Novotný Michal	01/06	Alternation	Date	Signature	Index x x x x x
	Authorized by:						
	Type: DIVIDING WALL ATTIC TL. 170						
RD RÝMAŘOV	VIEW OF THE FRAME				RD C 243		

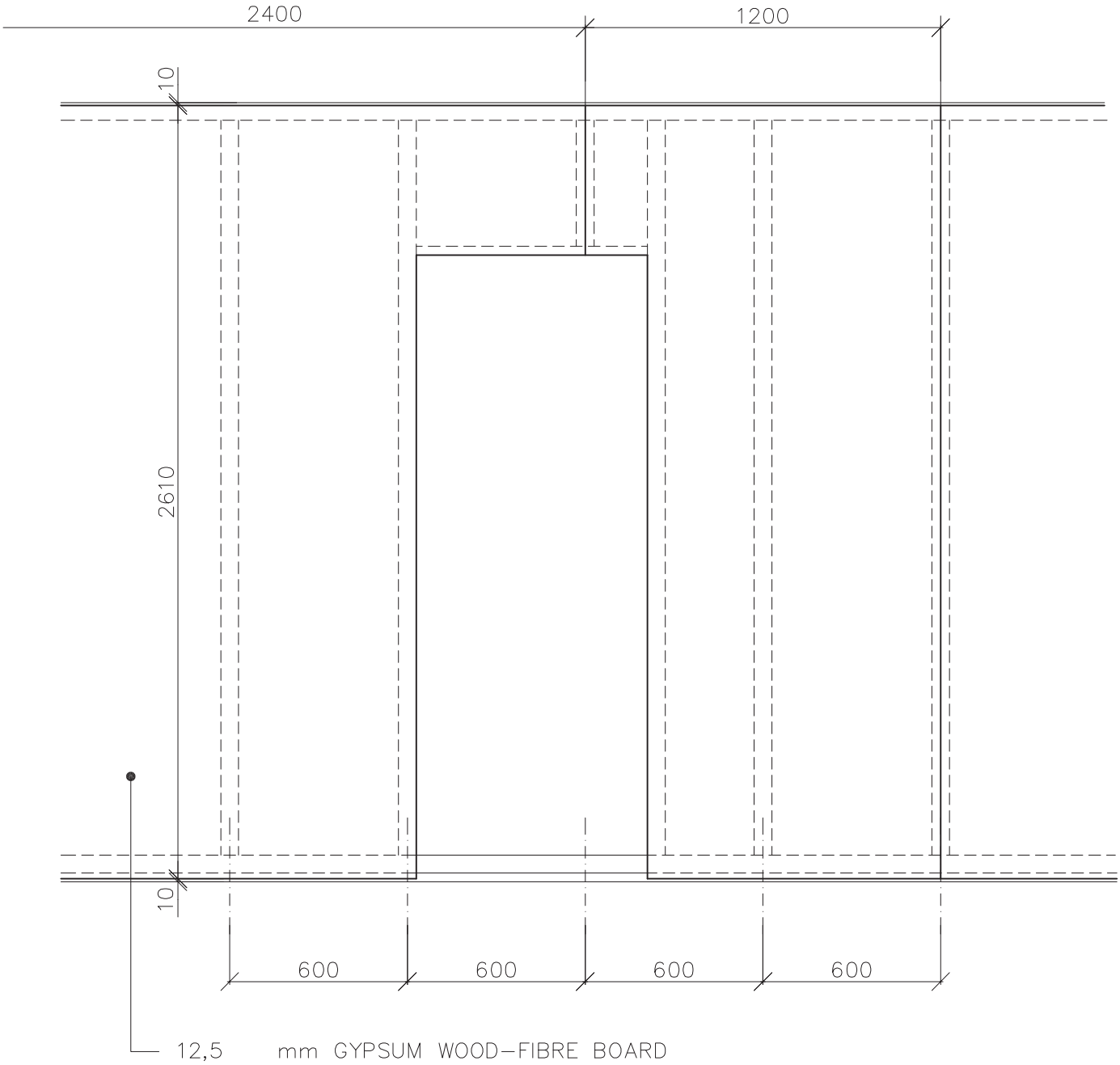

Scale applies to original 1:20	Remark: DETACHED HOUSE		Date				
	Worked out by:	Novotný Michal	01/06	Alternation	Date	Signature	Index x x x x x
	Authorized by:						
RD RÝMAŘOV	Type: DIVIDING WALL ATTIC TL. 170						
	VIEW OF THE SHEATHING						RD C 244

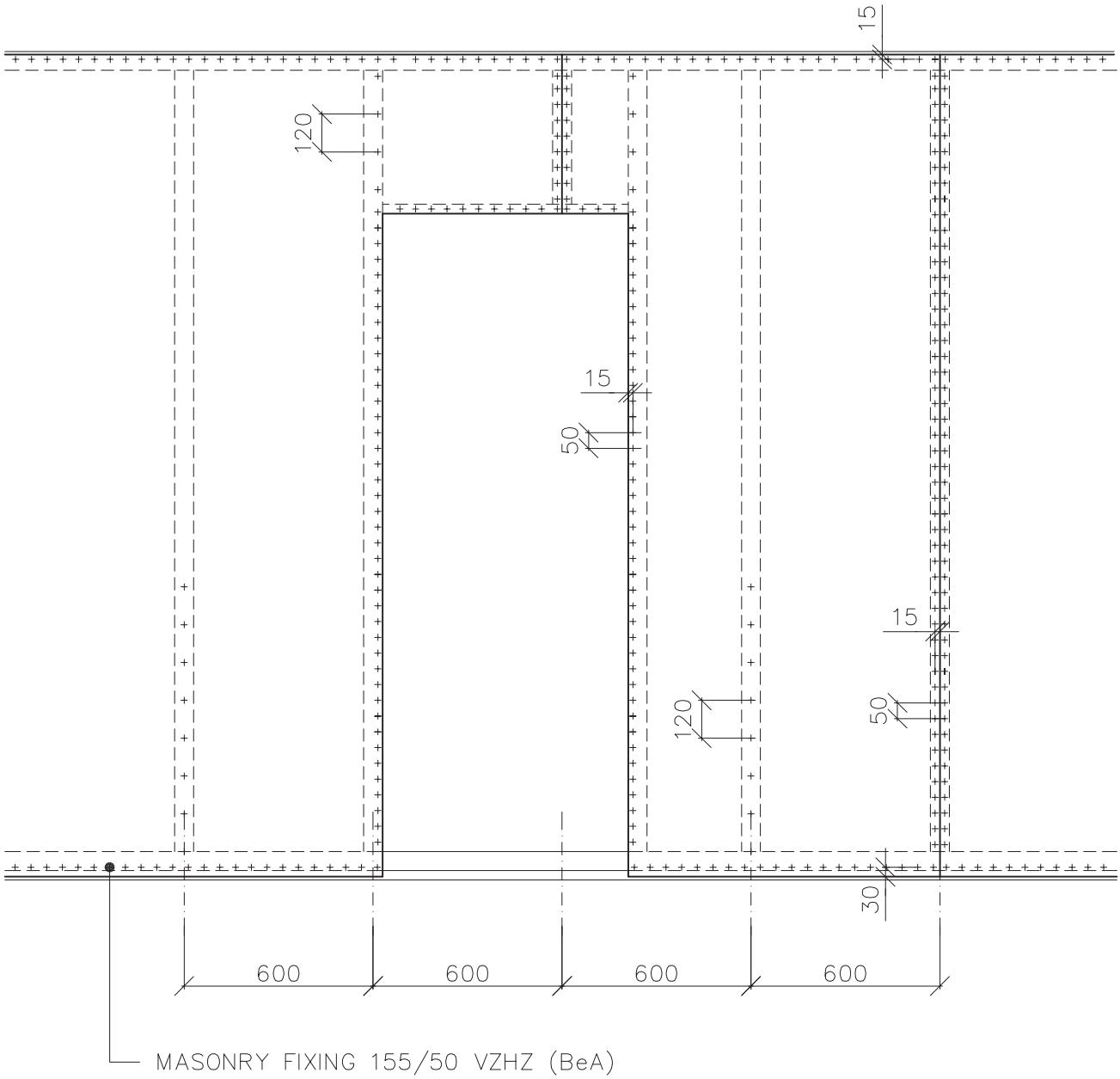

Scale applies to original 1:20	Remark: DETACHED HOUSE		Date				
	Worked out by:	Novotný Michal	01/06	Alternation	Date	Signature	Index
	Authorized by:						x x x x x
RD RÝMAŘOV	Type: DIVIDING WALL ATTIC TL. 170						
	FIXATION OF THE SHEATING ON THE FRAME					RD C 245	

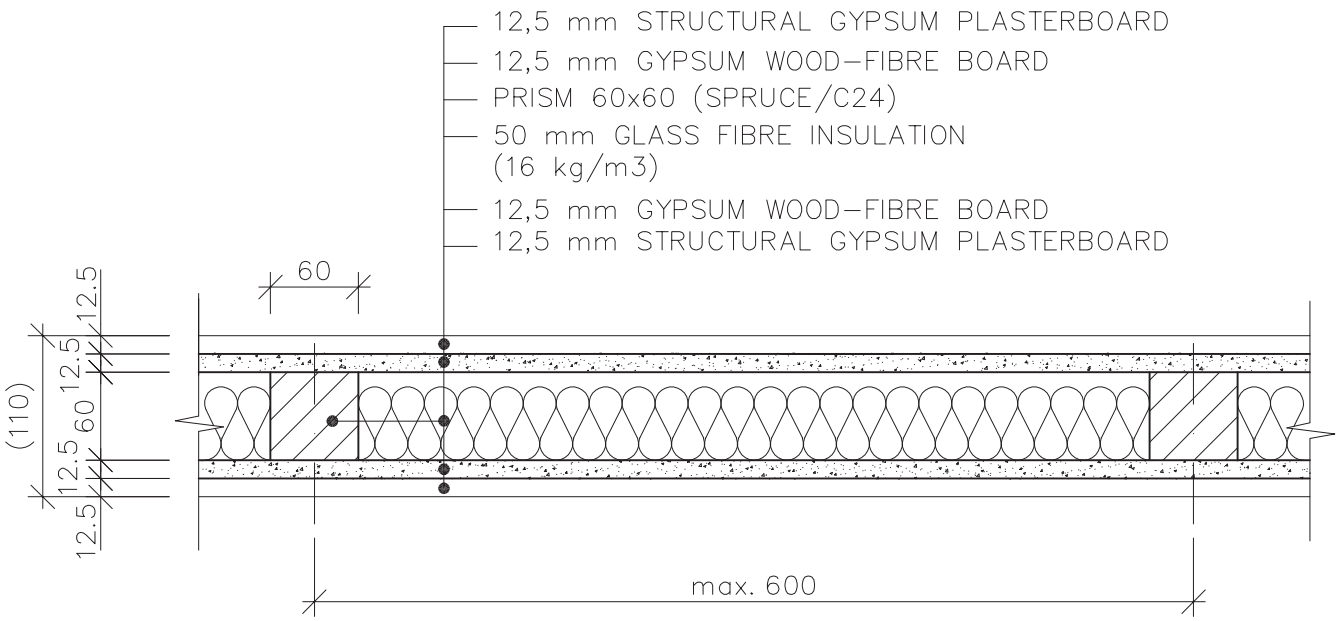

Scale applies to original 1:5	Remark: DETACHED HOUSE		Date				
	Worked out by:	Novotný Michal	01/06	Alternation	Date	Signature	Index x x x x x
	Authorized by:						
	Type: DIVIDING WALL ATTIC TL. 110						
RD RÝMAŘOV	HORIZONTAL SECTIONAL VIEW				RD C 251		

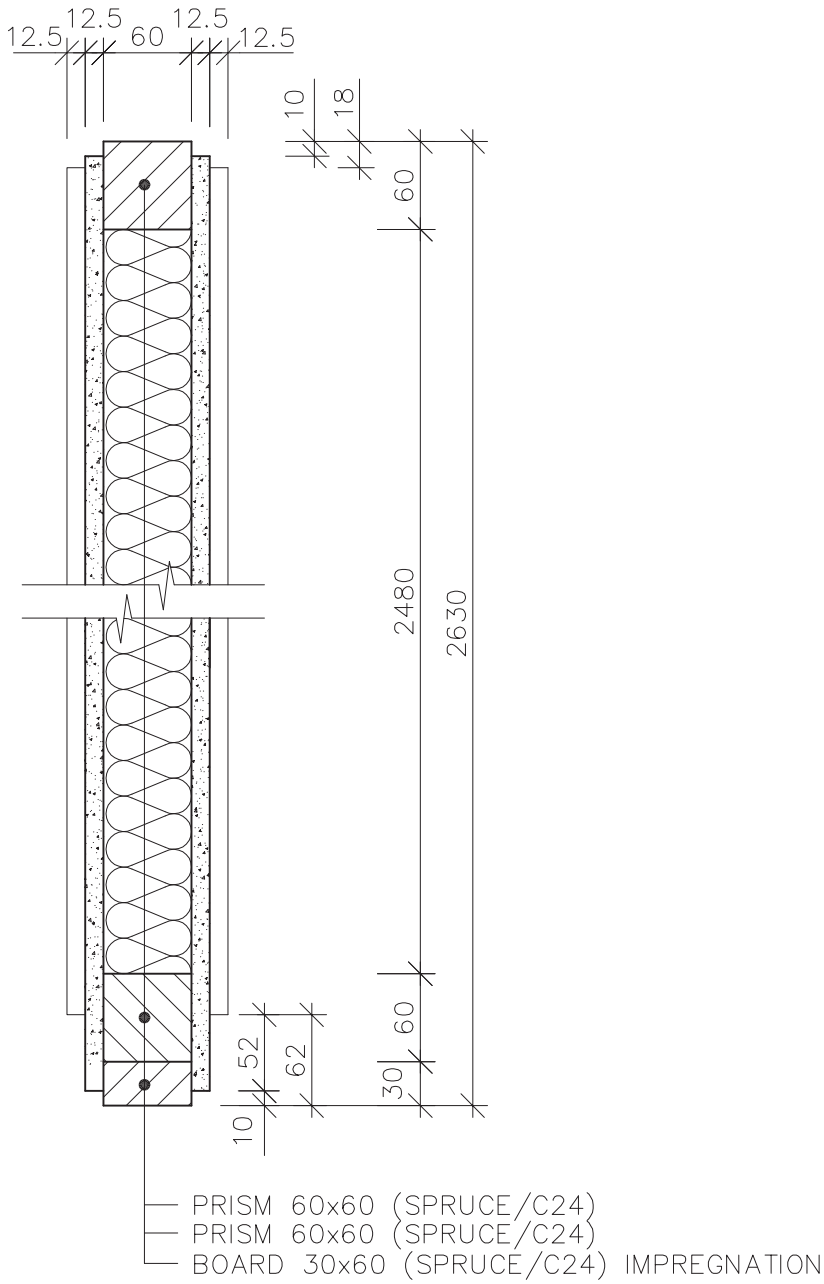

Scale applies to original 1:5	Remark: DETACHED HOUSE		Date				
	Worked out by:	Novotný Michal	01/06	Alternation	Date	Signature	Index x x x x x
	Authorized by:						
RD RÝMAŘOV	Type: DIVIDING WALL ATTIC TL. 110						
	VERTICAL SECTIONAL VIEW						RD C 252

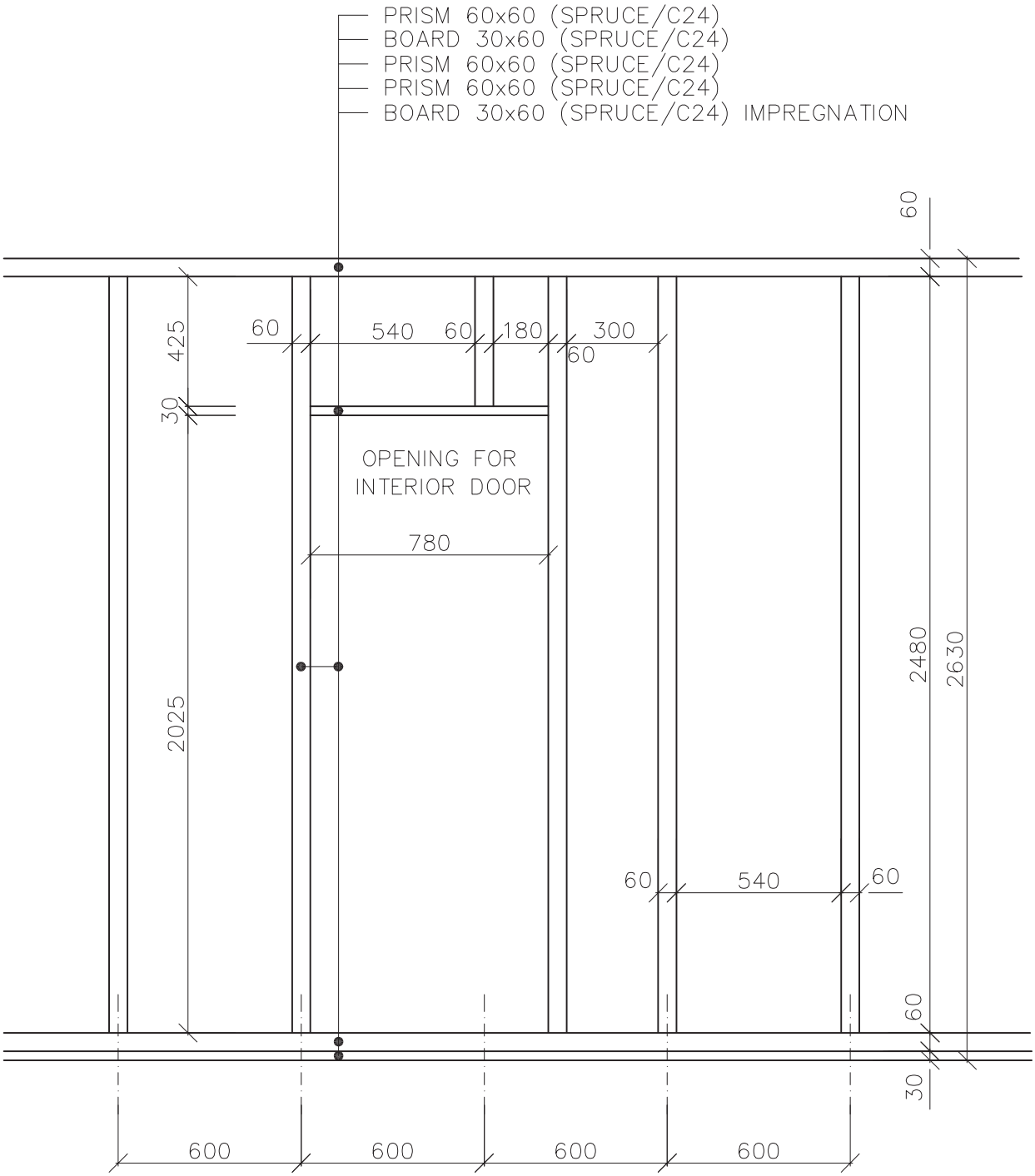

Scale applies to original 1:20	Remark: DETACHED HOUSE		Date				
	Worked out by:	Novotný Michal	01/06	Alternation	Date	Signature	Index x x x x x
	Authorized by:						
	Type: DIVIDING WALL ATTIC TL. 110						
RD RÝMAŘOV	VIEW OF THE FRAME				RD C 253		

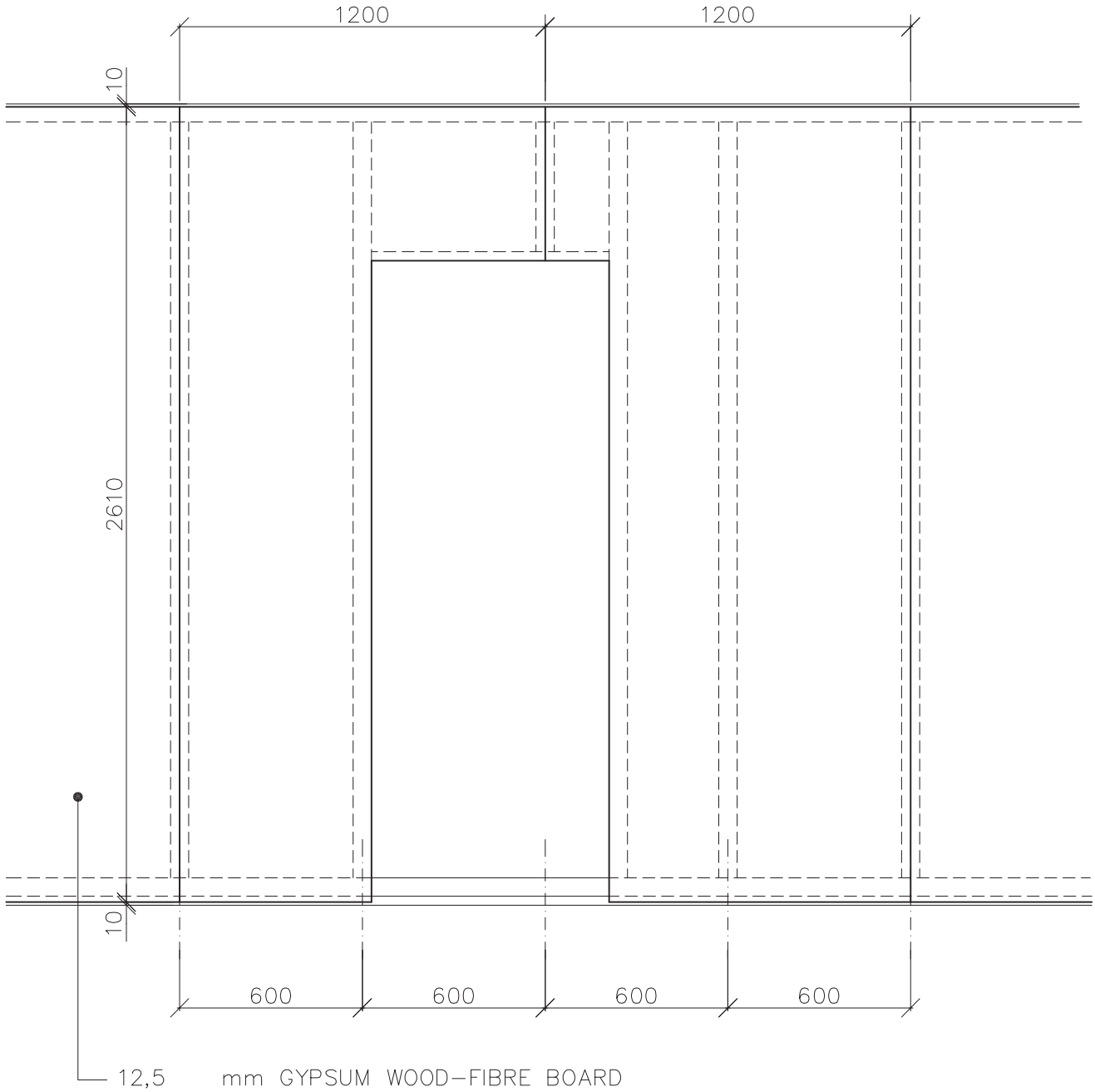

Scale applies to original 1:20	Remark: DETACHED HOUSE		Date				
	Worked out by:	Novotný Michal	01/06	Alternation	Date	Signature	Index
	Authorized by:						x x x x x
	Type: DIVIDING WALL ATTIC TL. 110						
RD RÝMAŘOV	VIEW OF THE SHEATHING				RD C 254		

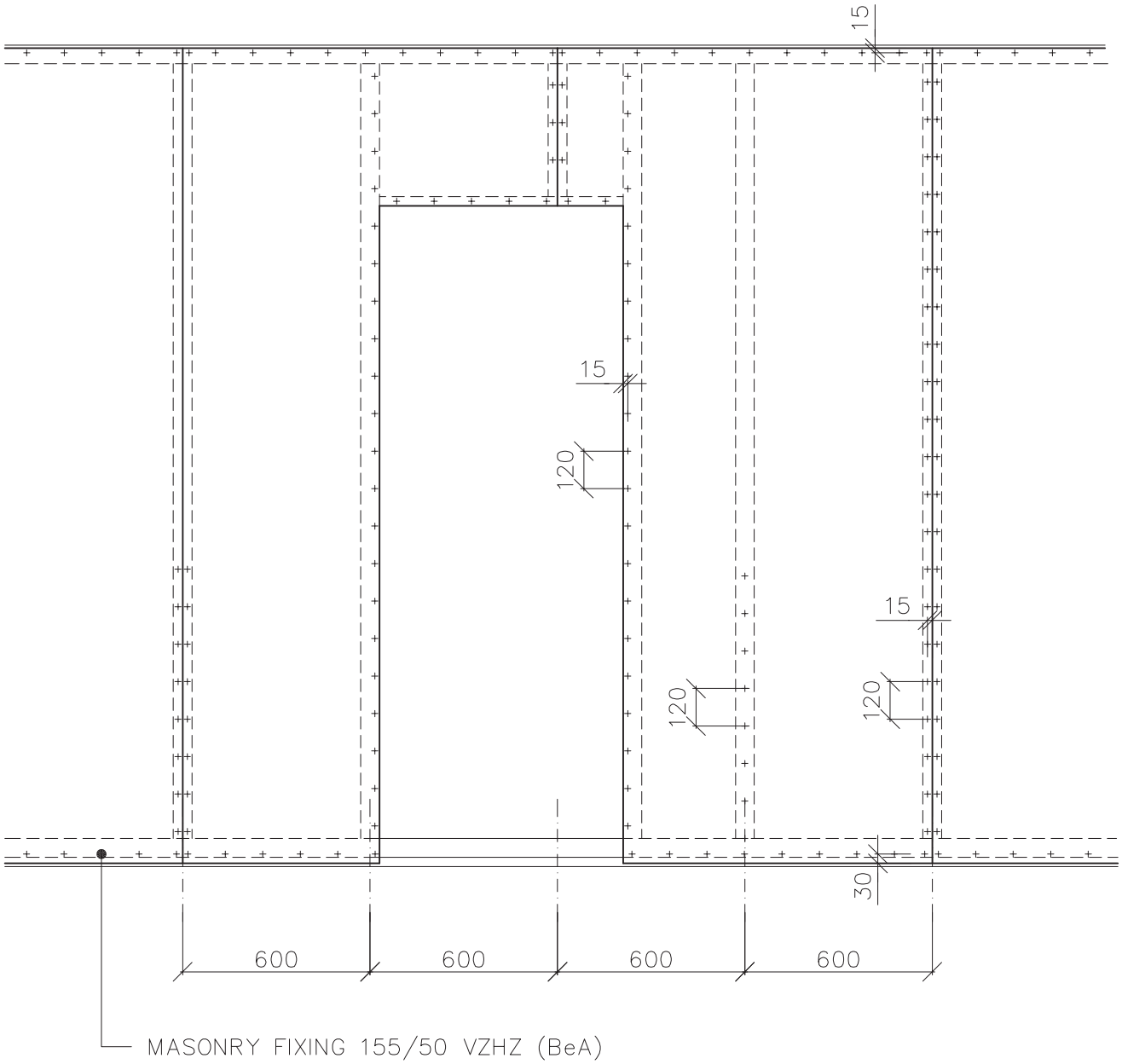

Scale applies to original 1:20	Remark: DETACHED HOUSE		Date				
	Worked out by:	Novotný Michal	01/06	Alternation	Date	Signature	Index x x x x x
	Authorized by:						
	Type: DIVIDING WALL ATTIC TL. 110						
RD RÝMAŘOV	FIXATION OF THE SHEATING ON THE FRAME				RD C 255		

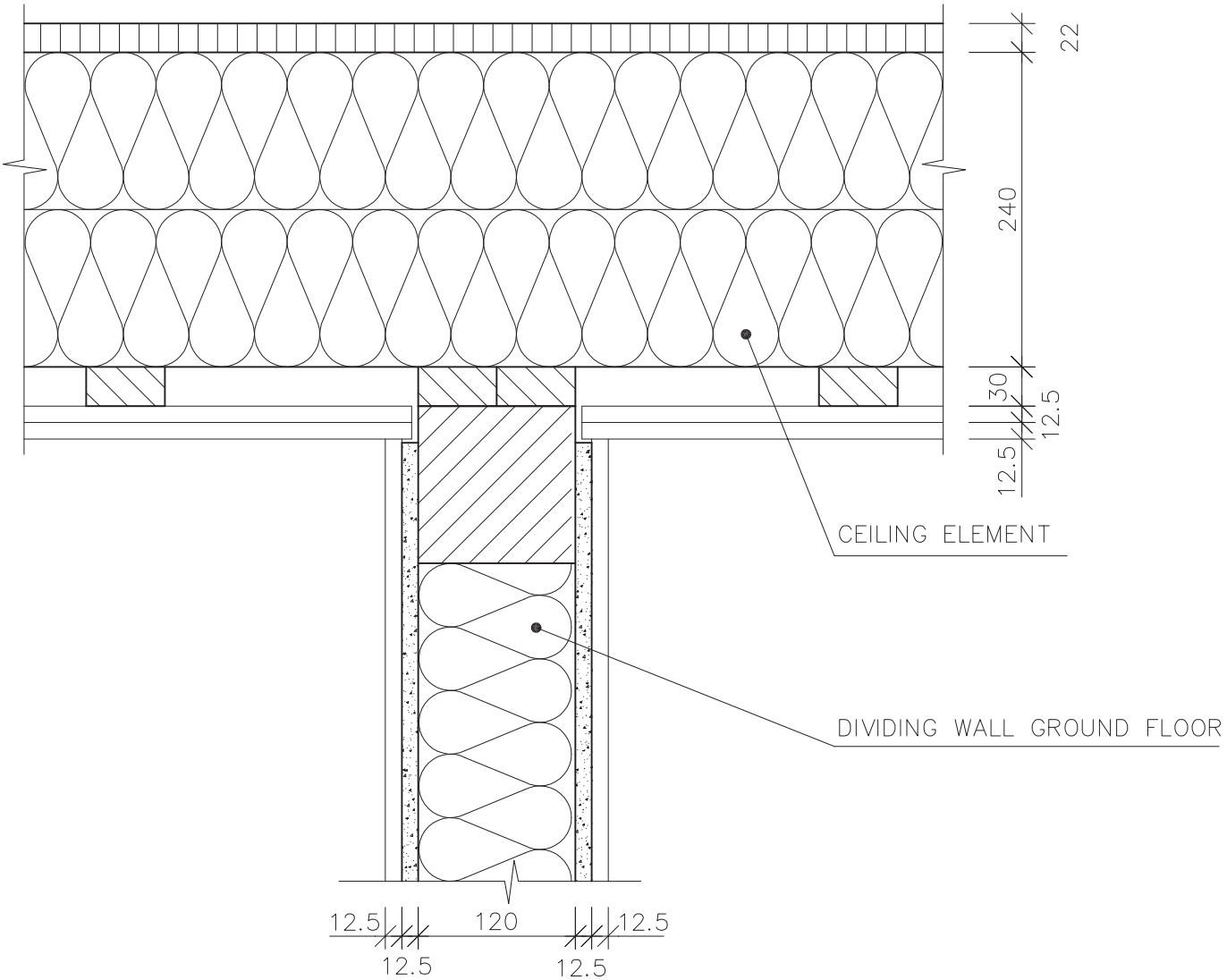

Scale applies to original 1:5	Remark: DETACHED HOUSE		Date				
	Worked out by:	Novotný Michal	01/06	Alternation	Date	Signature	Index x x x x x
	Authorized by:						
RD RÝMAŘOV	Type: DIVIDING WALL GROUND FLOOR						
	CONNECTION DIVIDING WALL GROUND FLOOR WITH THE CEILING ELEMENT						RD C 261

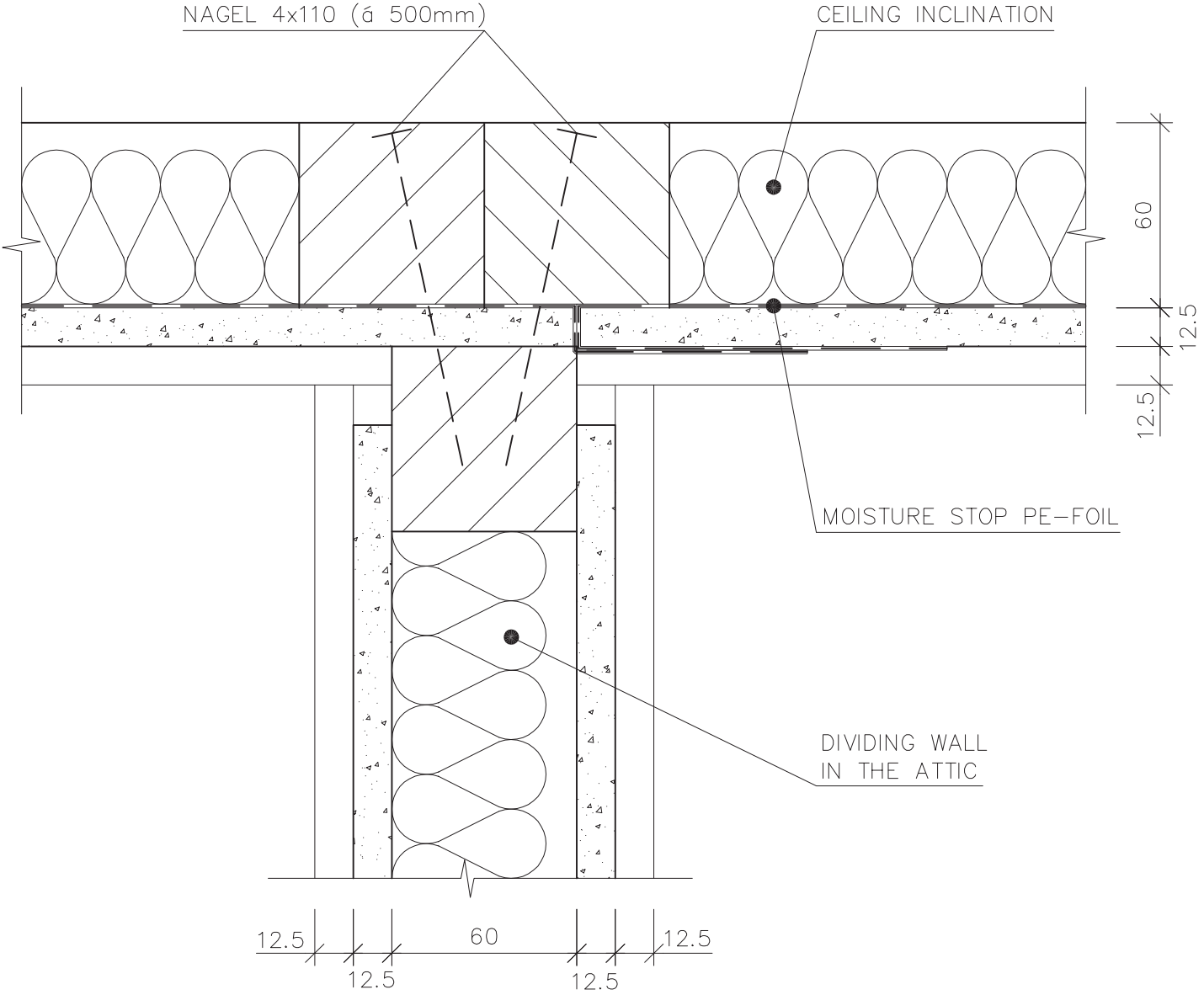

Scale applies to original 1:2	Remark: DETACHED HOUSE		Date				
	Worked out by:	Novotný Michal	01/06	Alternation	Date	Signature	Index x
	Authorized by:						x
							x
							x
							x
RD RÝMAŘOV	Type: DIVIDING WALL IN THE ATTIC						
	CONNECTION ATTIC DIVIDING WALL WITH CEILING INCLINATION					RD C 262	

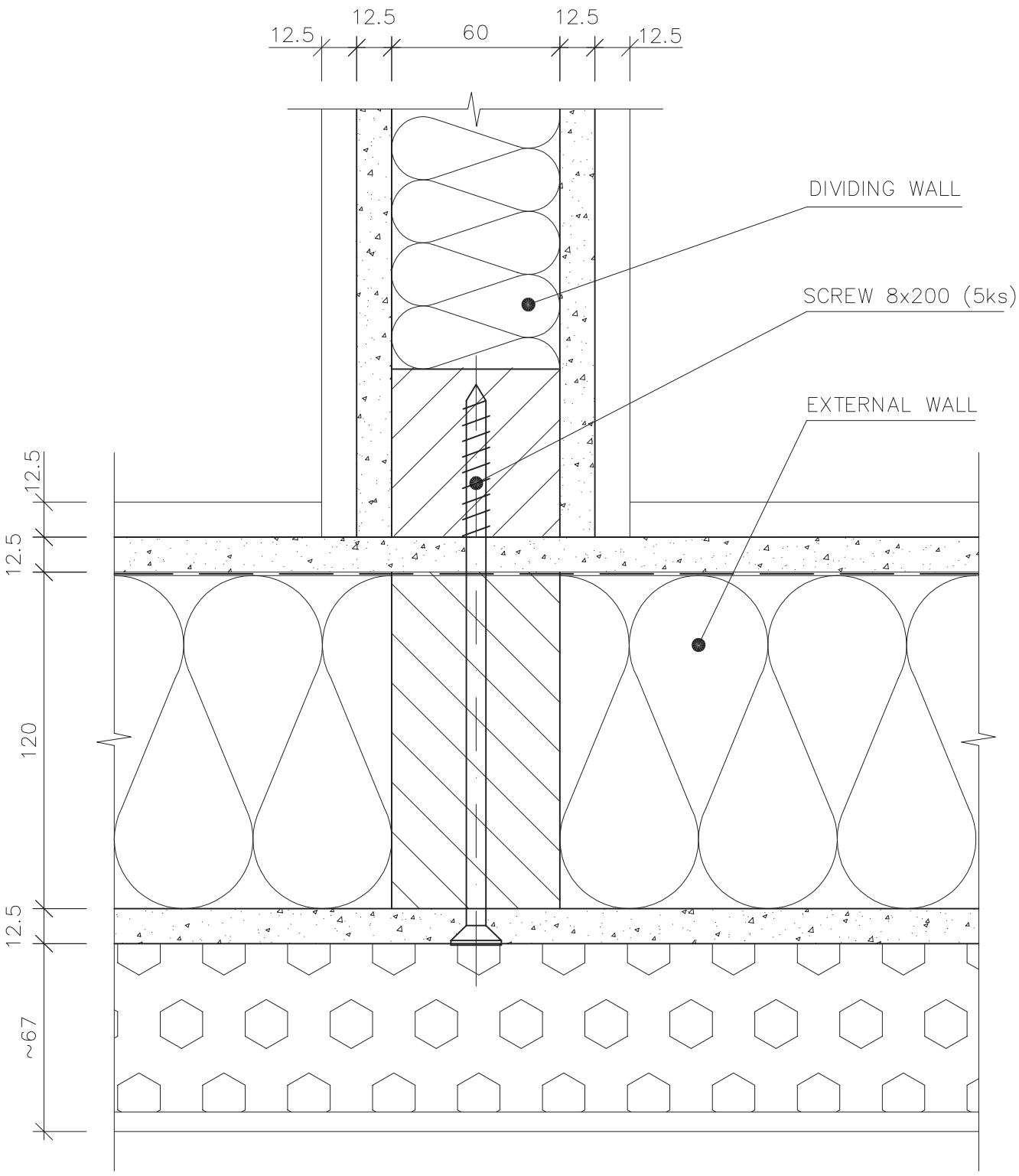

Scale applies to original 1:2	Remark: DETACHED HOUSE		Date				
	Worked out by:	Novotný Michal	01/06	Alternation	Date	Signature	Index x x x x x
	Authorized by:						
RD RÝMAŘOV	Type: DIVIDING WALL GROUND FLOOR						
	CONNECTION DIVIDING WALL WITH EXTERNAL WALL				RD C 263		

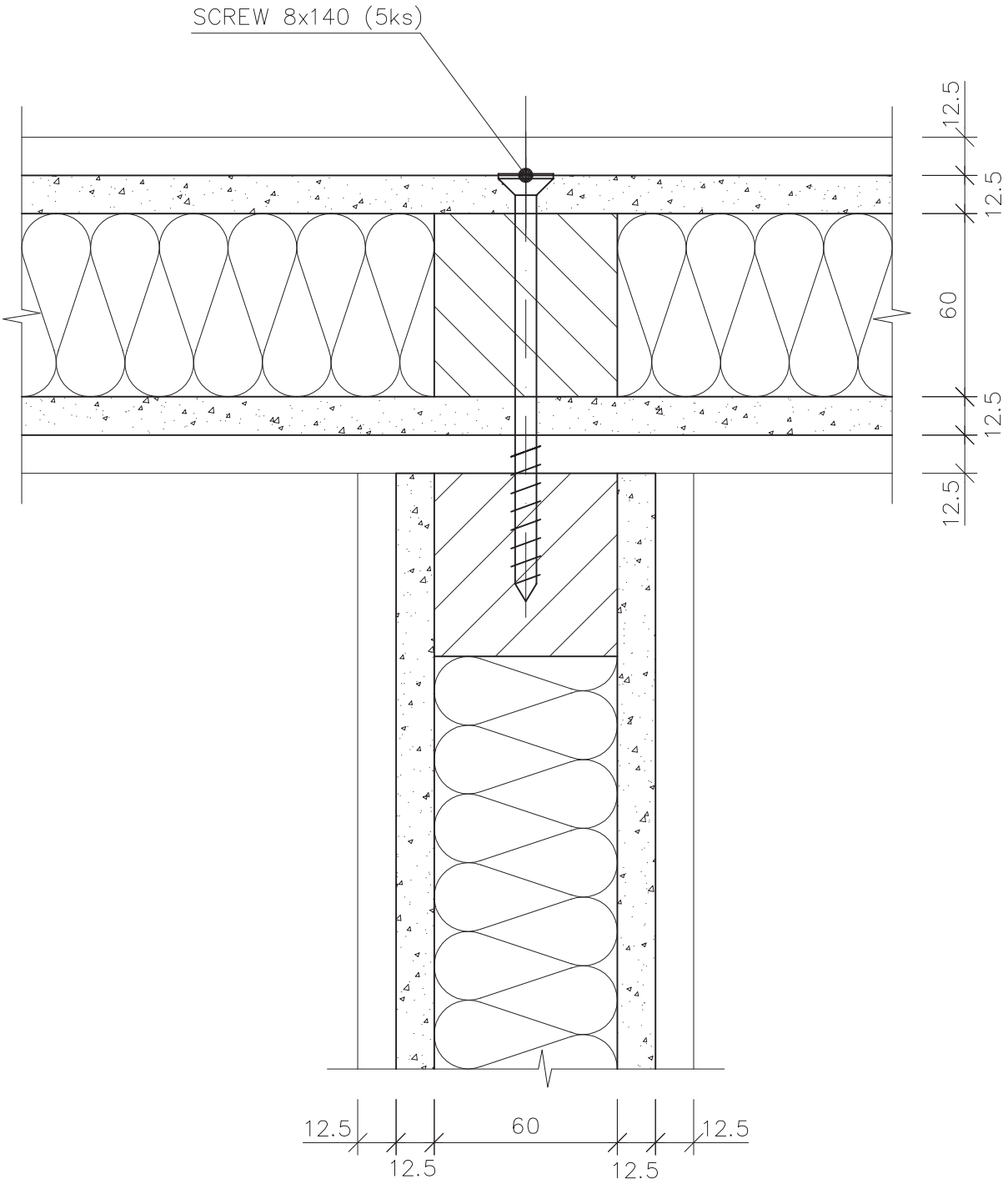

Scale applies to original 1:2	Remark: DETACHED HOUSE		Date				
	Worked out by:	Novotný Michal	01/06	Alternation	Date	Signature	Index x x x x x
	Authorized by:						
RD RÝMAŘOV	Type: CONNECTION OF DIVIDING WALLS TO VERTICAL CONNECTION				RD C 264		

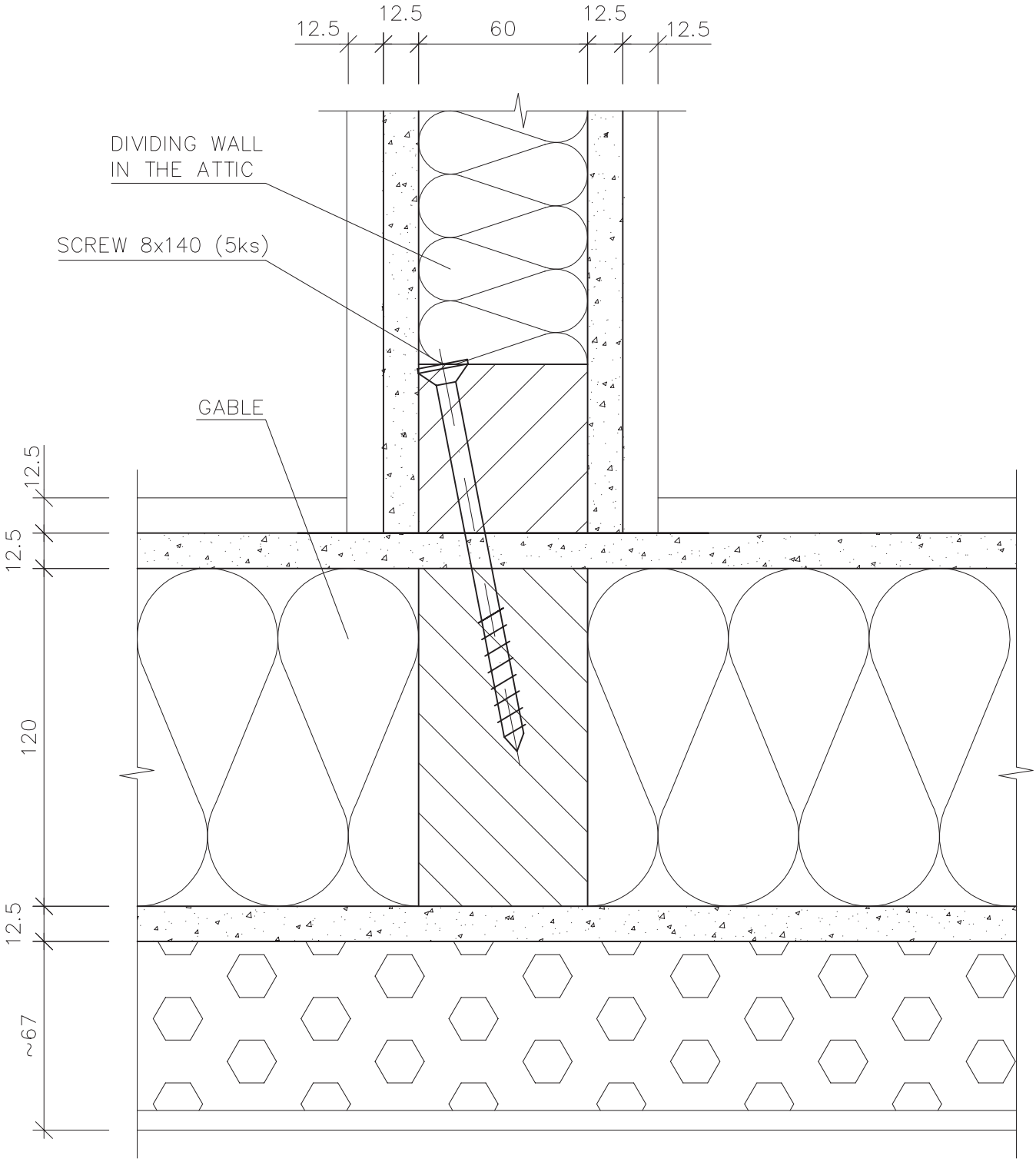

Scale applies to original 1:2	Remark: DETACHED HOUSE		Date				
	Worked out by:	Novotný Michal	01/06	Alternation	Date	Signature	Index x x x x x
	Authorized by:						
RD RÝMAŘOV	Type: DIVIDING WALL IN THE ATTIC						
	CONNECTION OF THE DIVIDING WALL TO THE GABLE						RD C 265

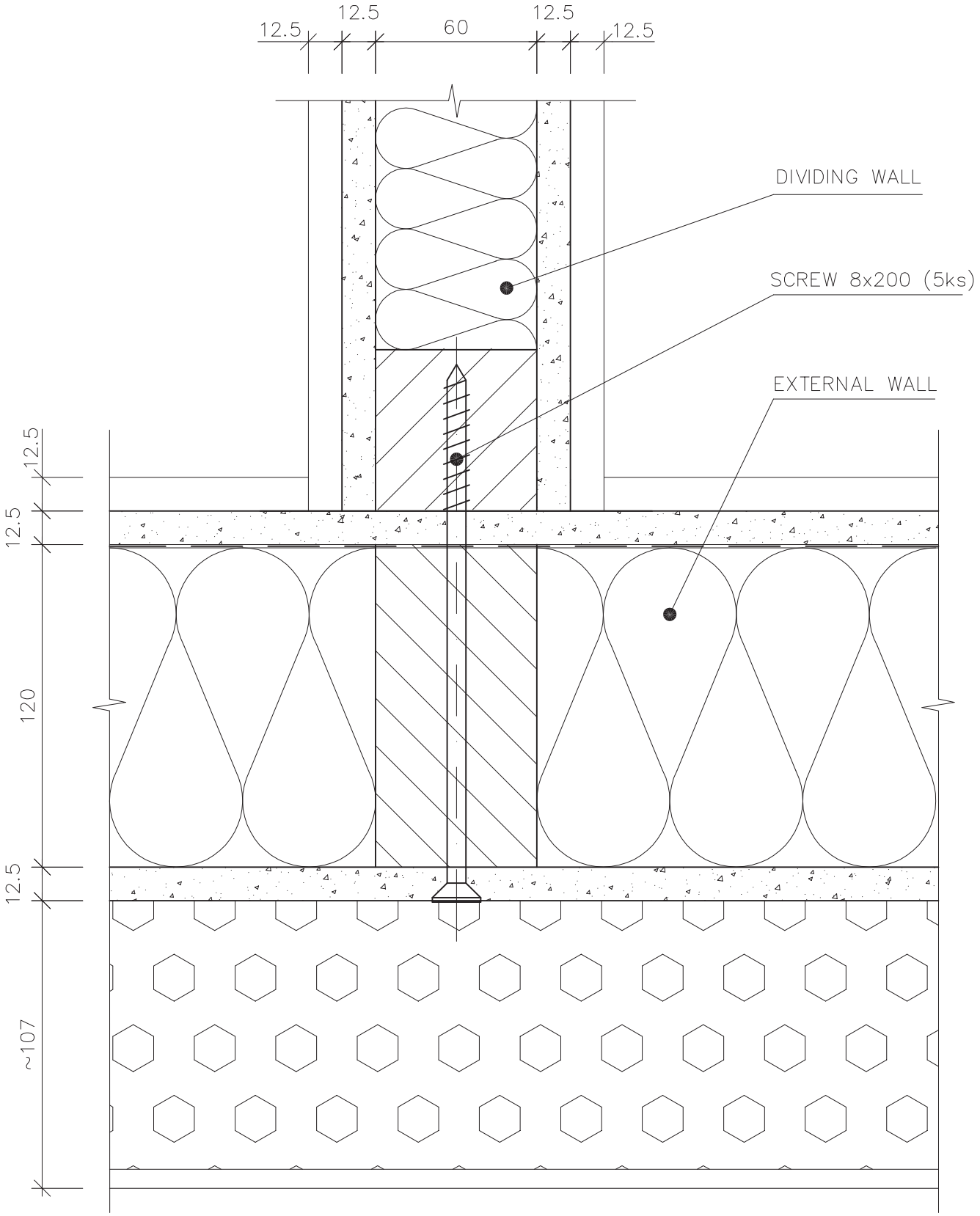

Scale applies to original 1:2	Remark: DETACHED HOUSE		Date				
	Worked out by:	Ing. Pavel Krupa	09/07	Alternation	Date	Signature	Index x x x x x
	Authorized by:	Tomáš Jánošík	09/07				
RD RÝMAŘOV	Type: DIVIDING WALL GROUND FLOOR						
	CONNECTION DIVIDING WALL WITH EXTERNAL WALL					RD C 266	

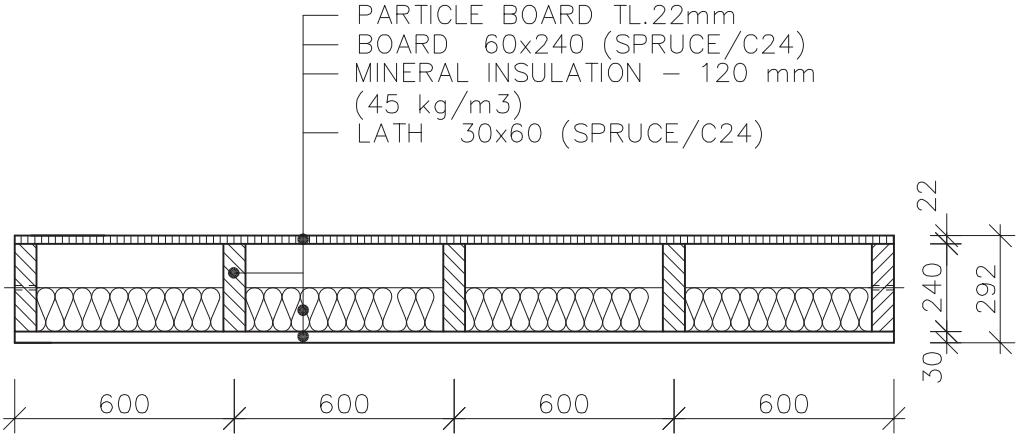

Scale applies to original 1:20	Remark: DETACHED HOUSE		Date				
	Worked out by:	HONIGSCHMIED MICHAL	01/06	Alternation	Date	Signature	Index x x x x x
	Authorized by:						
STROPNÍ	ELEMENT PŘÍZEMÍ – ŽEBRO 1						

RD RÝMAŘOV

Type: CEILING ELEMENT GROUND FLOOR – RIB 1

GROUND FLOOR CEILING SECTION – RIB 1

RD C 301

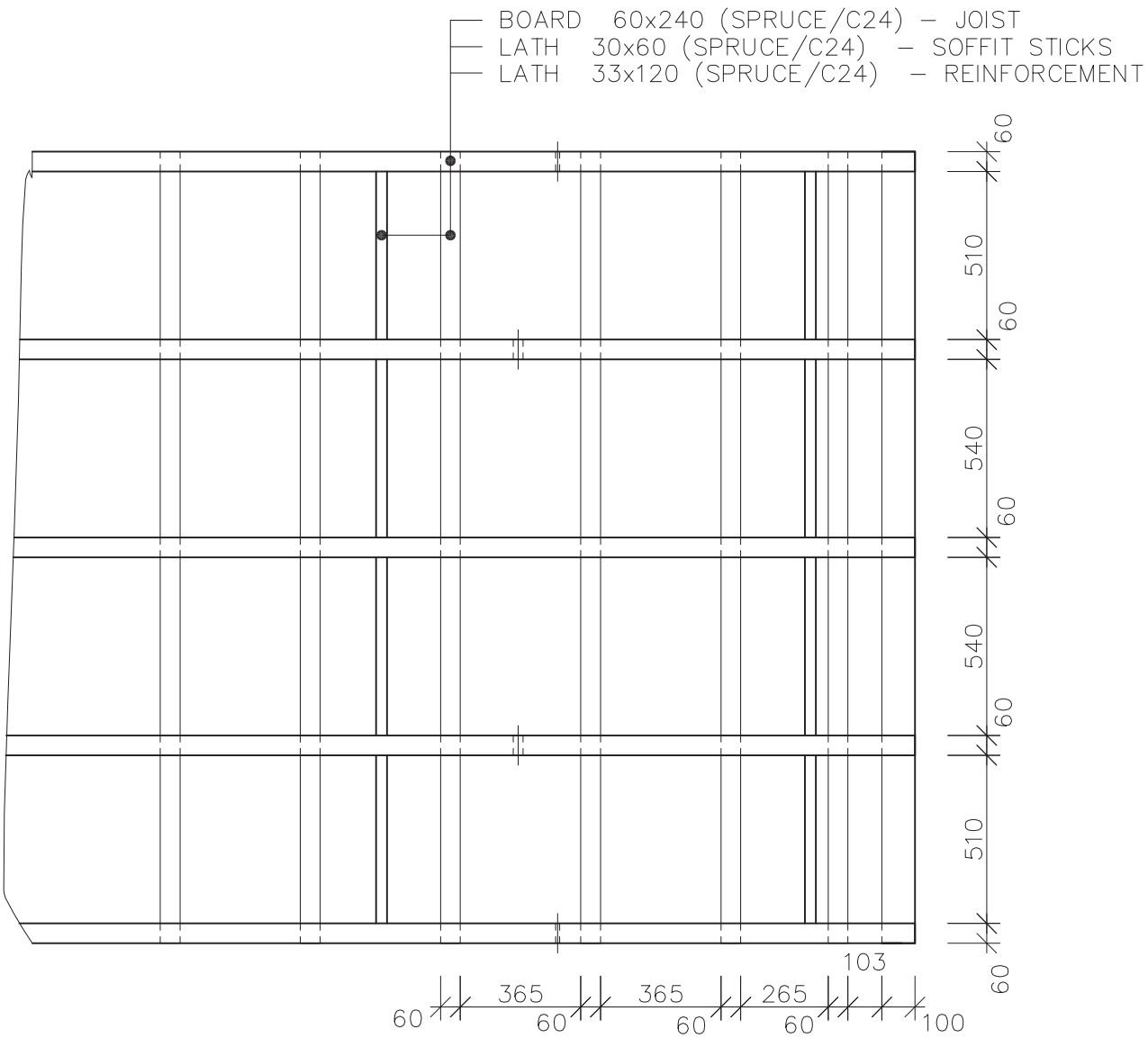

Scale applies to original 1:20	Remark: DETACHED HOUSE		Date				
	Worked out by:	HONIGSCHMIED MICHAL	01/06	Alternation	Date	Signature	Index x x x x x
	Authorized by:						
RD RÝMAŘOV	Type: VIEW OF THE FRAME – CEILING GROUND FLOOR RIB 1			RD C 302			

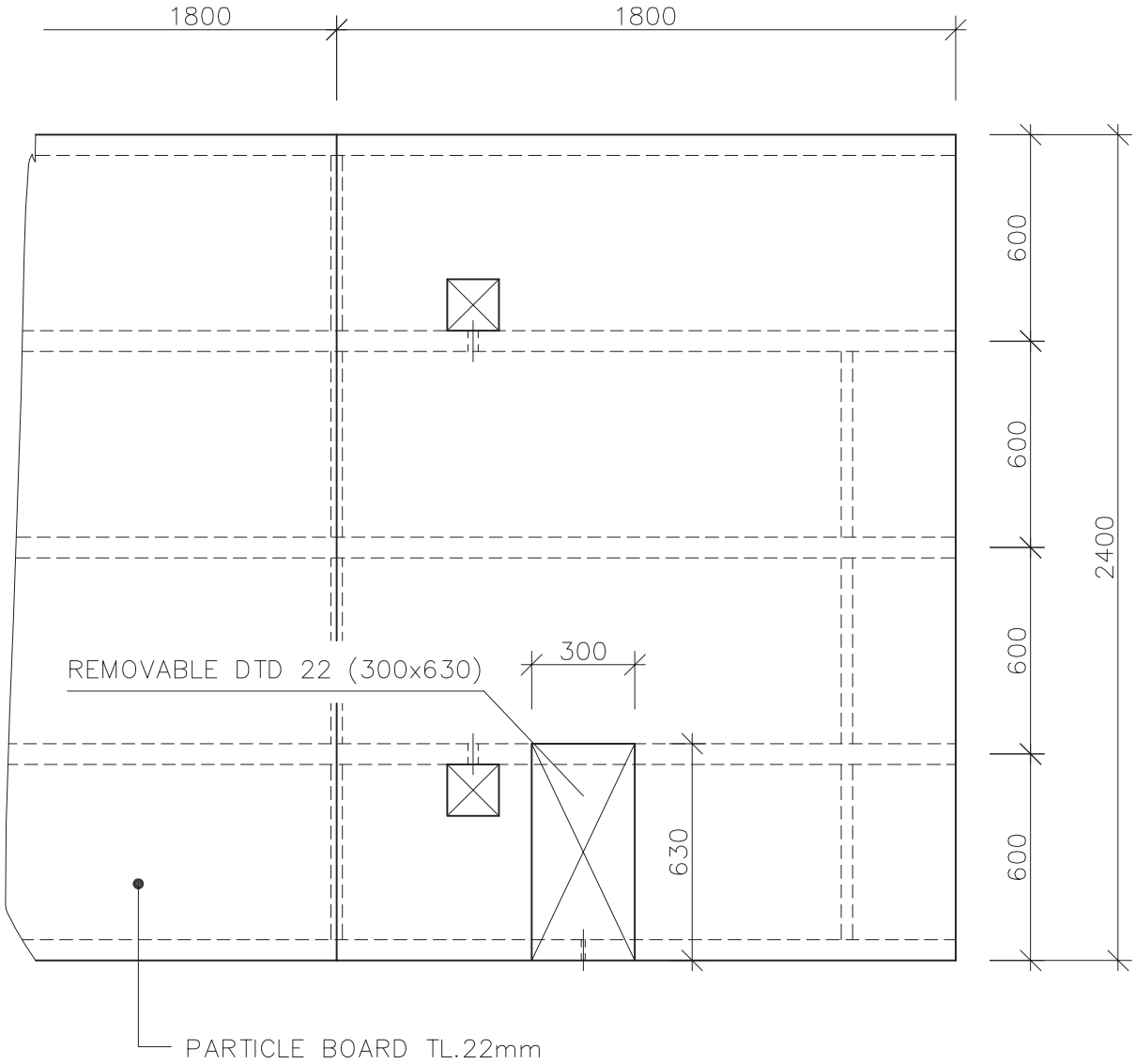

Scale applies to original 1:20	Remark: DETACHED HOUSE		Date				
	Worked out by:	HONIGSCHMIED MICHAL	01/06	Alternation	Date	Signature	Index
	Authorized by:						x x x x x
RD RÝMAŘOV	Type: VIEW OF THE SHEATHING – CEILING GROUND FLOOR RIB 1			RD C 303			

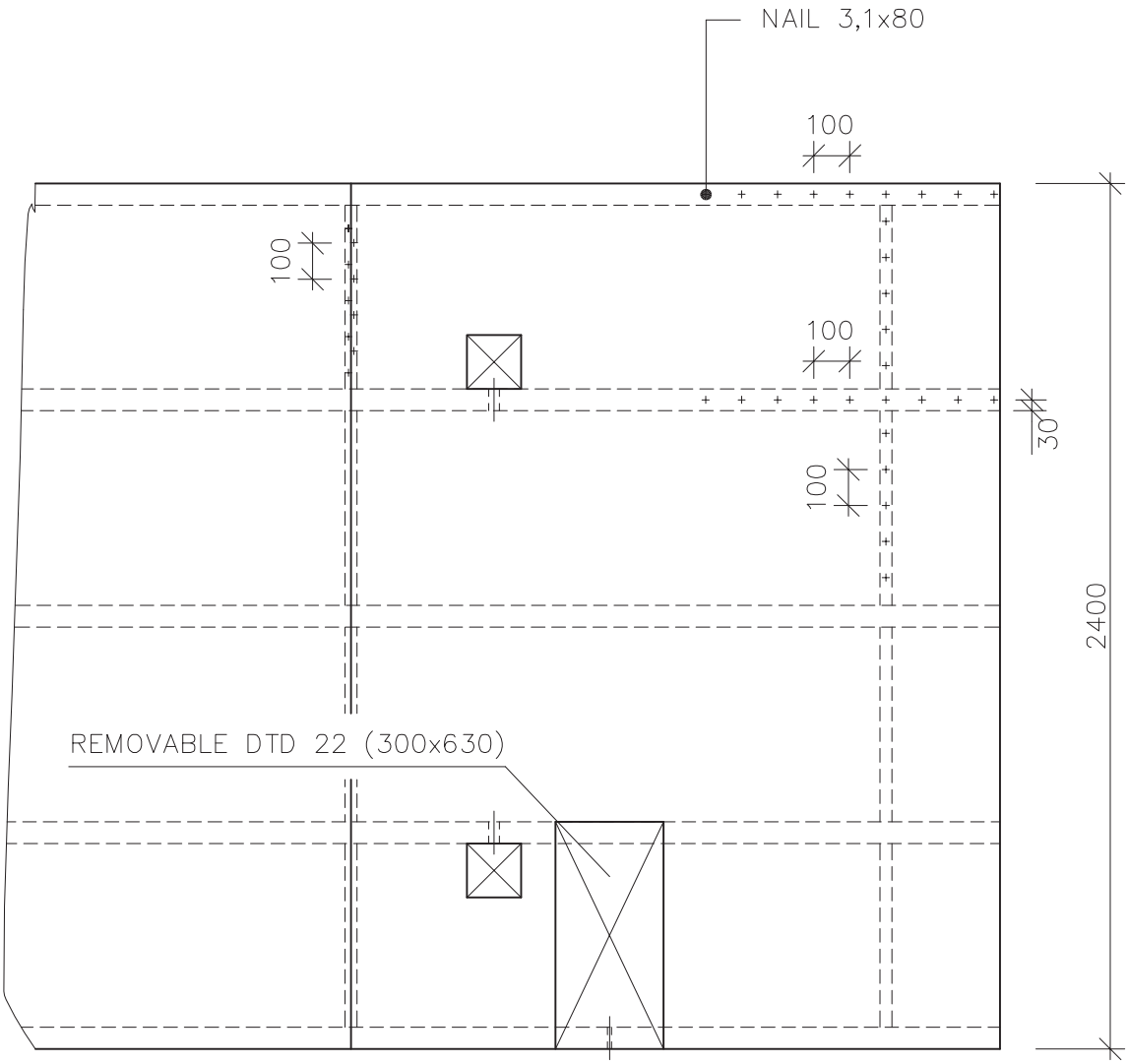

Scale applies to original 1:20	Remark: DETACHED HOUSE		Date				
	Worked out by:	HONIGSCHMIED MICHAL	01/06	Alternation	Date	Signature	Index
	Authorized by:						x x x x x
RD RÝMAŘOV	Type: FIXATION OF THE SHEATING ON THE FRAME – CEILING GROUND FLOOR RIB 1				RD C 304		

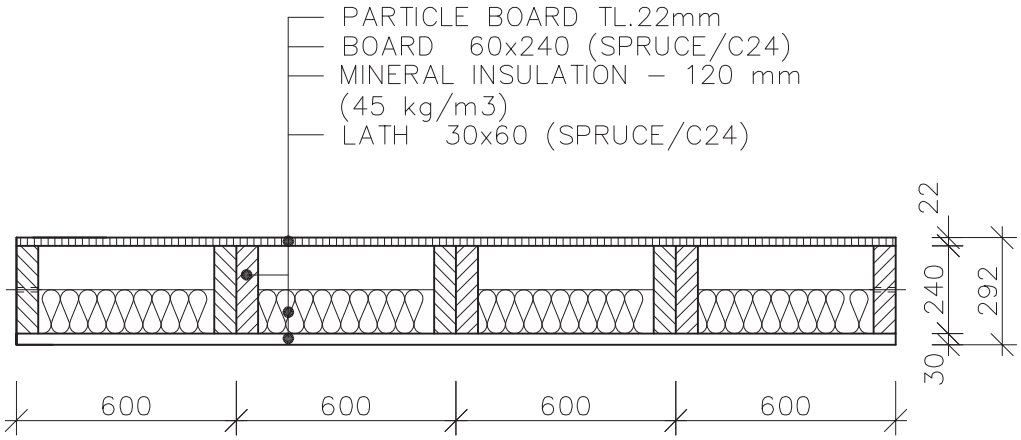

Scale applies to original 1:20	Remark: DETACHED HOUSE		Date				
	Worked out by:	HONIGSCHMIED MICHAL	01/06	Alternation	Date	Signature	Index x
	Authorized by:						x
							x
							x
							x
RD RÝMAŘOV	Type: CEILING ELEMENT GROUND FLOOR – RIB 2						
	GROUND FLOOR CEILING SECTION – RIB 2					RD C 305	

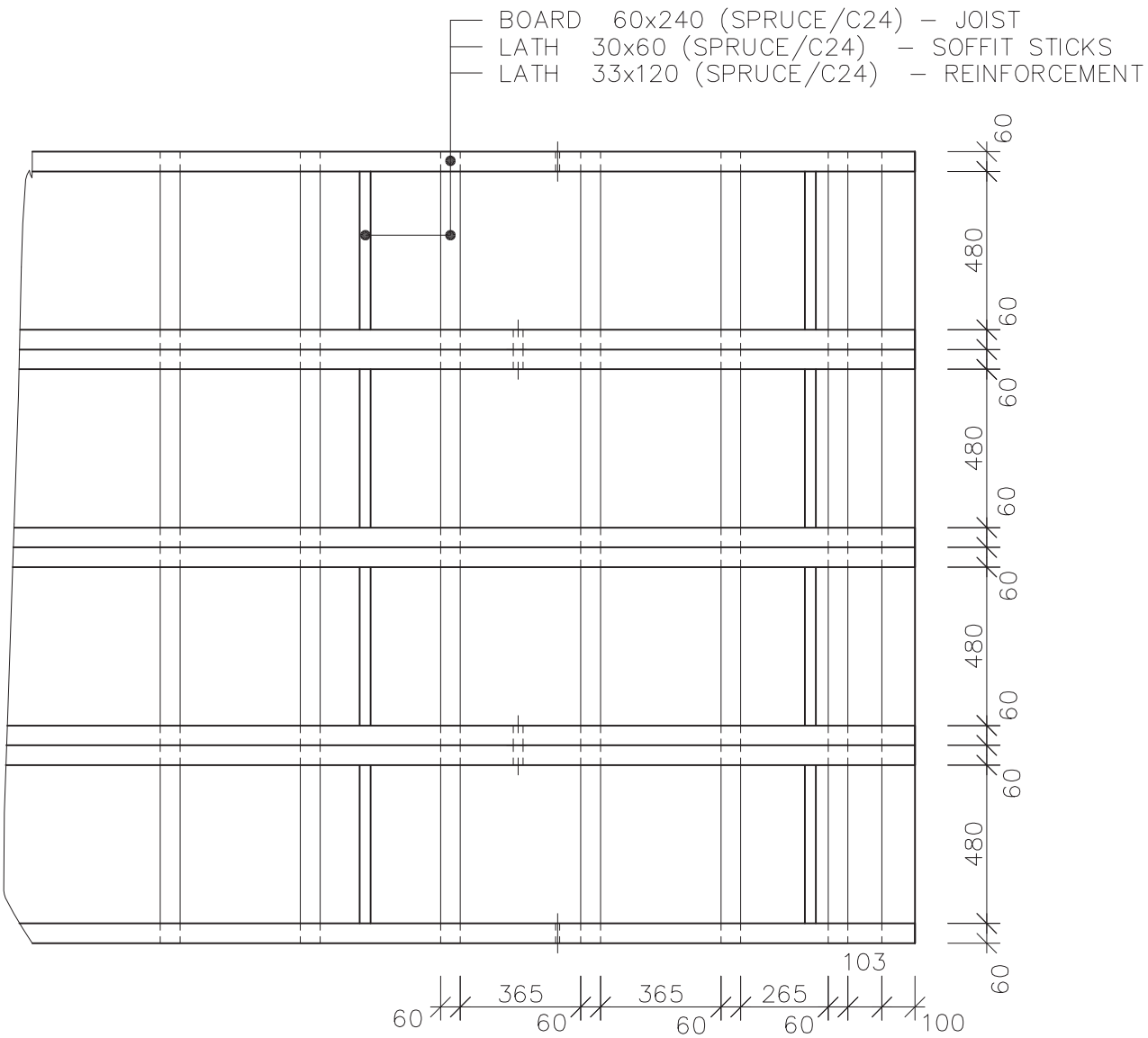

Scale applies to original 1:20	Remark: DETACHED HOUSE		Date				
	Worked out by:	HONIGSCHMIED MICHAL	01/06	Alternation	Date	Signature	Index x x x x x
	Authorized by:						
RD RÝMAŘOV	Type: VIEW OF THE FRAME – CEILING GROUND FLOOR RIB 2			RD C 306			

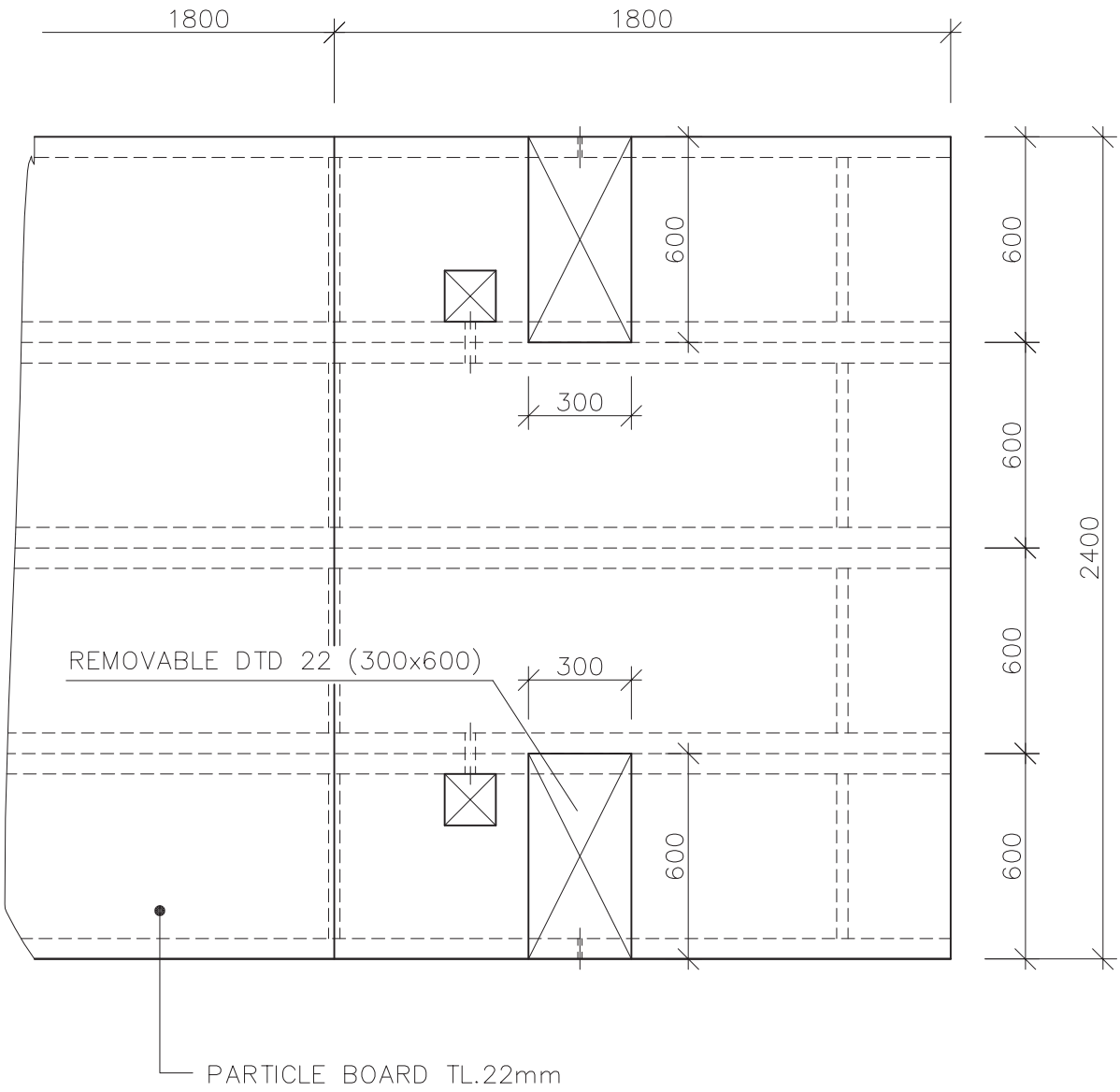

Scale applies to original 1:20	Remark: DETACHED HOUSE		Date				
	Worked out by:	HONIGSCHMIED MICHAL	01/06	Alternation	Date	Signature	Index x x x x x
	Authorized by:						
RD RÝMAŘOV	Type: VIEW OF THE SHEATHING – CEILING GROUND FLOOR RIB 2				RD C 307		

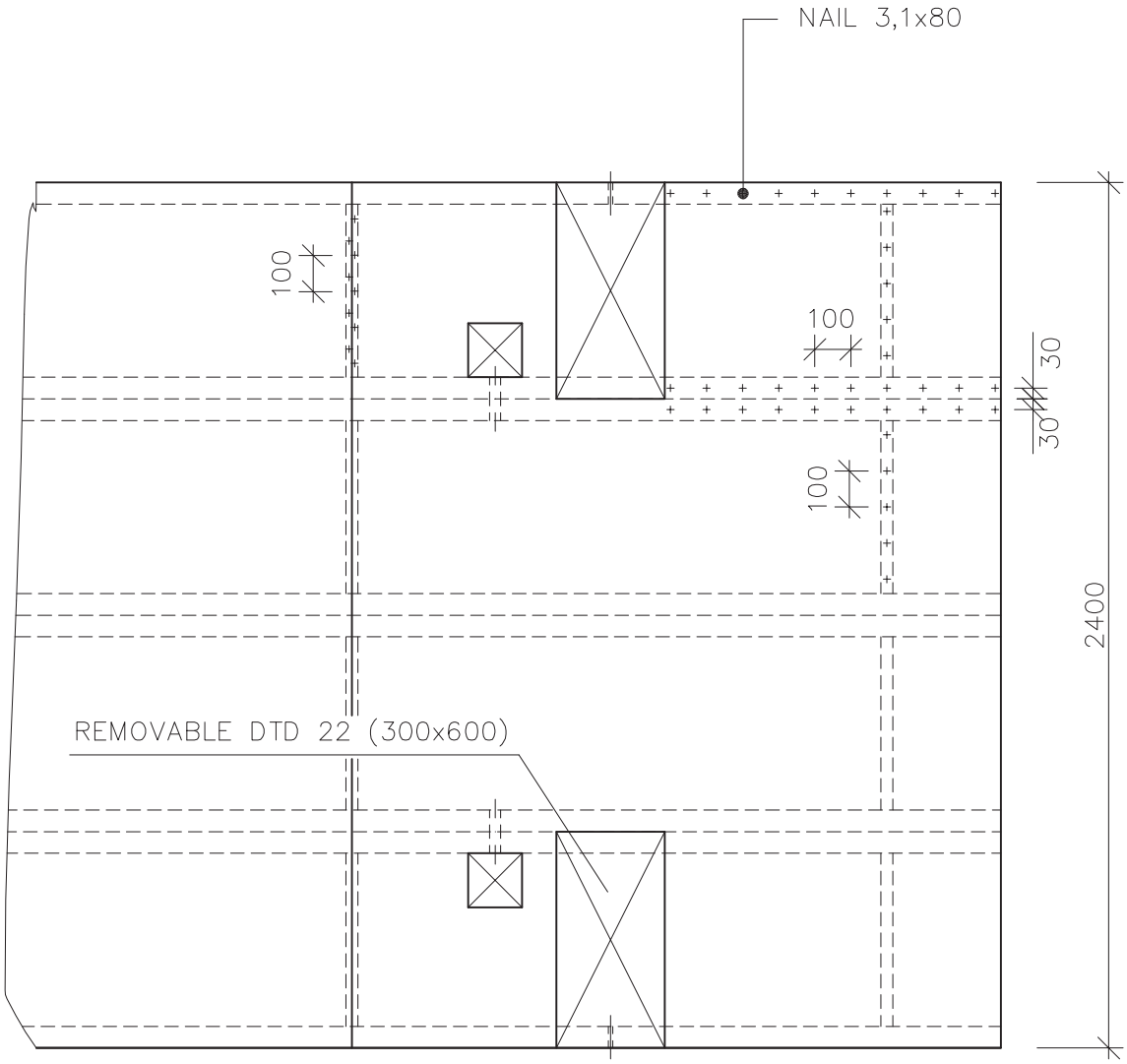

Scale applies to original 1:20	Remark: DETACHED HOUSE		Date				
	Worked out by:	HONIGSCHMIED MICHAL	01/06	Alternation	Date	Signature	Index x x x x x
	Authorized by:						
RD RÝMAŘOV	Type: FIXATION OF THE SHEATING ON THE FRAME – CEILING GROUND FLOOR RIB 2				RD C 308		

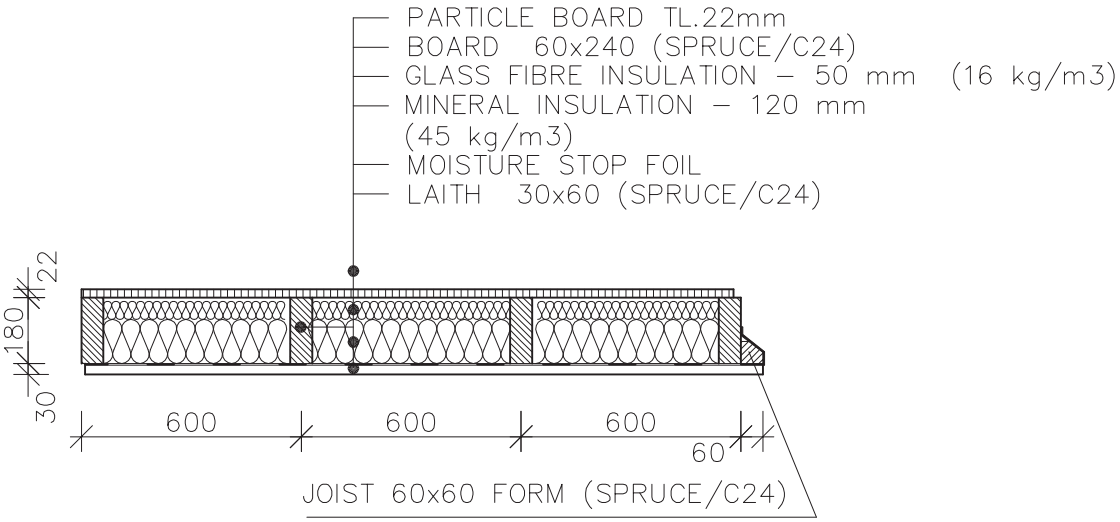

Scale applies to original 1:20	Remark: DETACHED HOUSE VK		Date				
	Worked out by:	HONIGSCHMIED MICHAL	01/06	Alternation	Date	Signature	Index x x x x x
	Authorized by:						
RD RÝMAŘOV	Type: CEILING ELEMENT ATTIC						
	SECTION OF THE ATTIC CEILING				RD C 311		

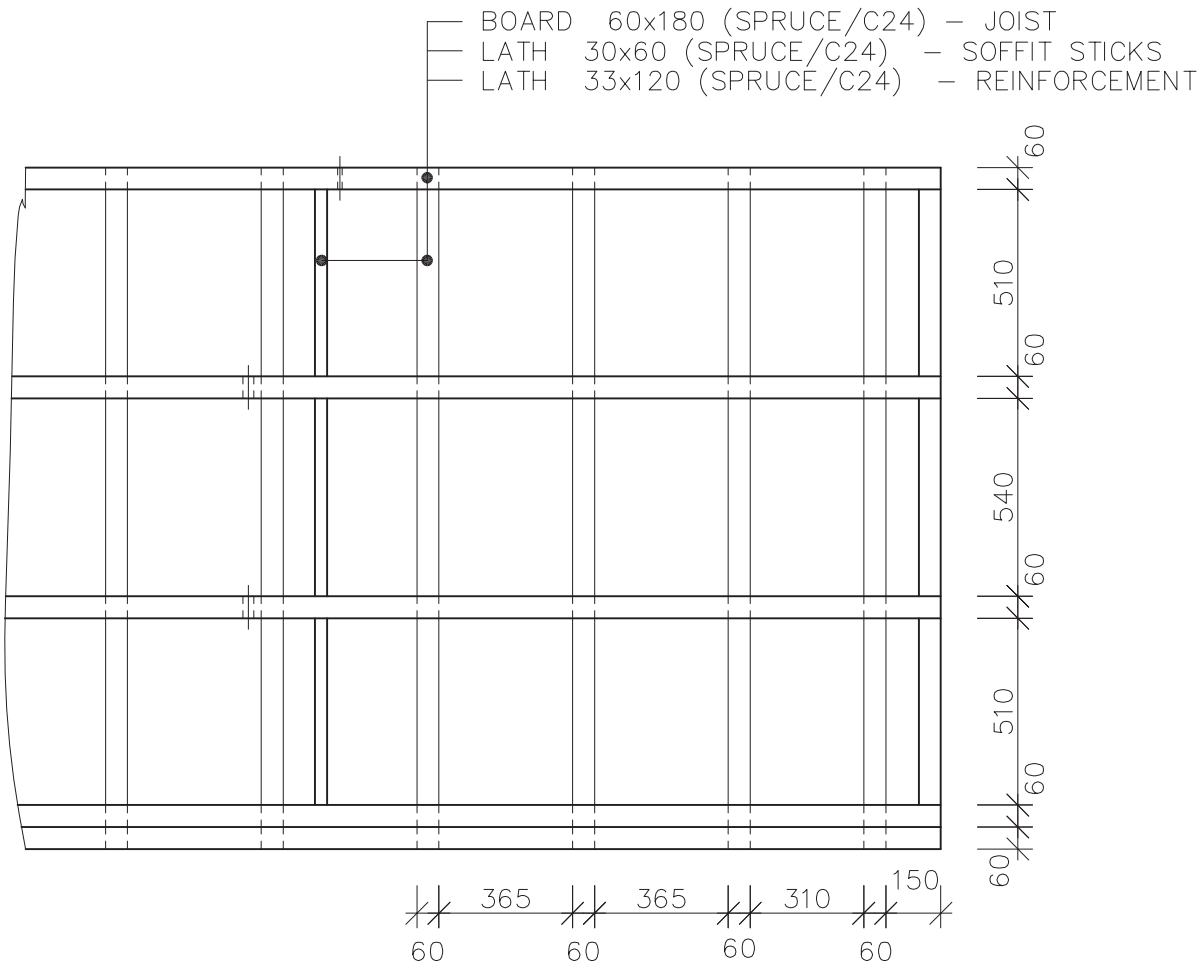

Scale applies to original 1:20	Remark: DETACHED HOUSE		Date				
	Worked out by:	HONIGSCHMIED MICHAL	01/06	Alternation	Date	Signature	Index x x x x x
	Authorized by:						
RD RÝMAŘOV	Type: VIEW OF THE FRAME – CEILING ATTIC				RD C 312		

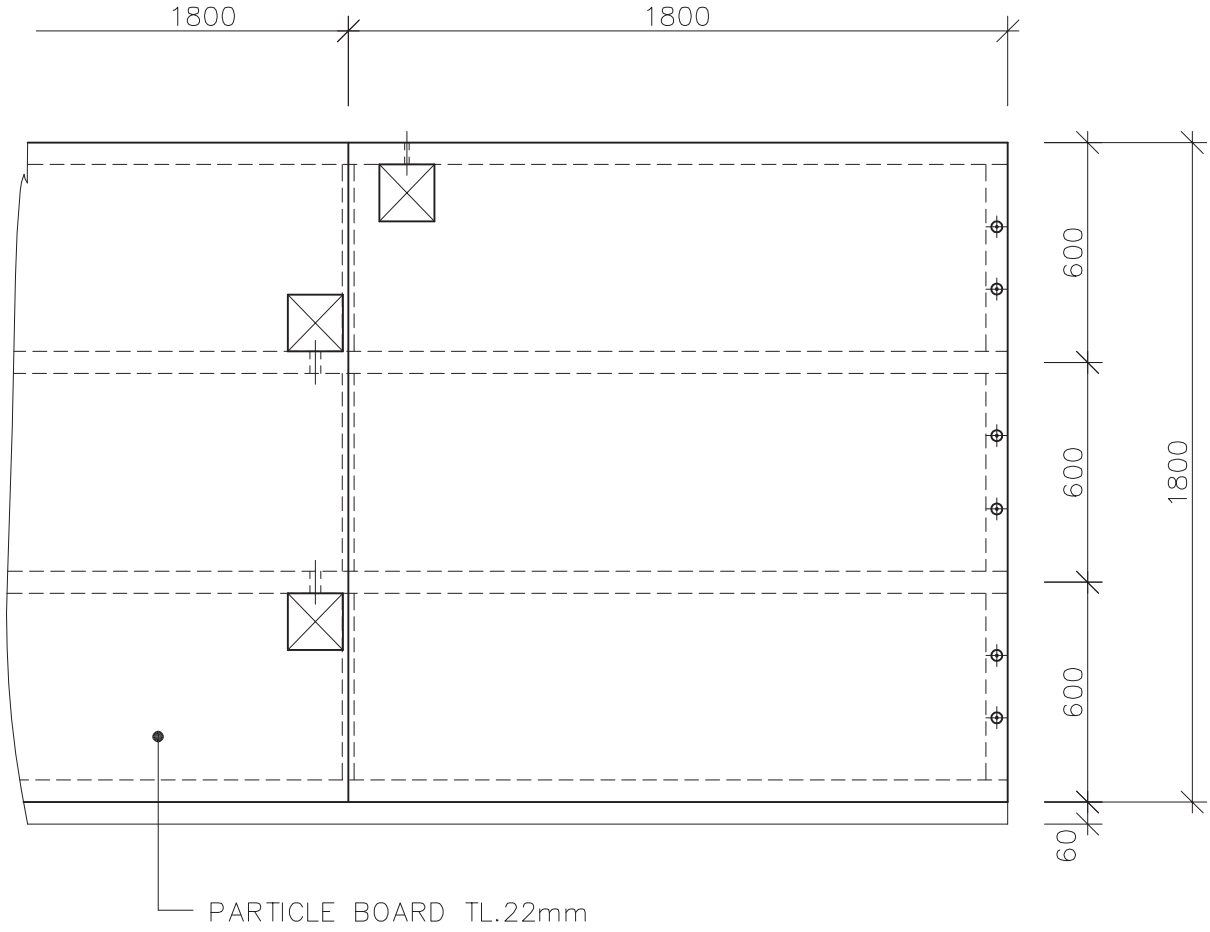

Scale applies to original 1:20	Remark: DETACHED HOUSE		Date				
	Worked out by:	HONIGSCHMIED MICHAL	01/06	Alternation	Date	Signature	Index x x x x x
	Authorized by:						
RD RÝMAŘOV	Type: VIEW OF THE SHEATHING – CEILING ATTIC				RD C 313		

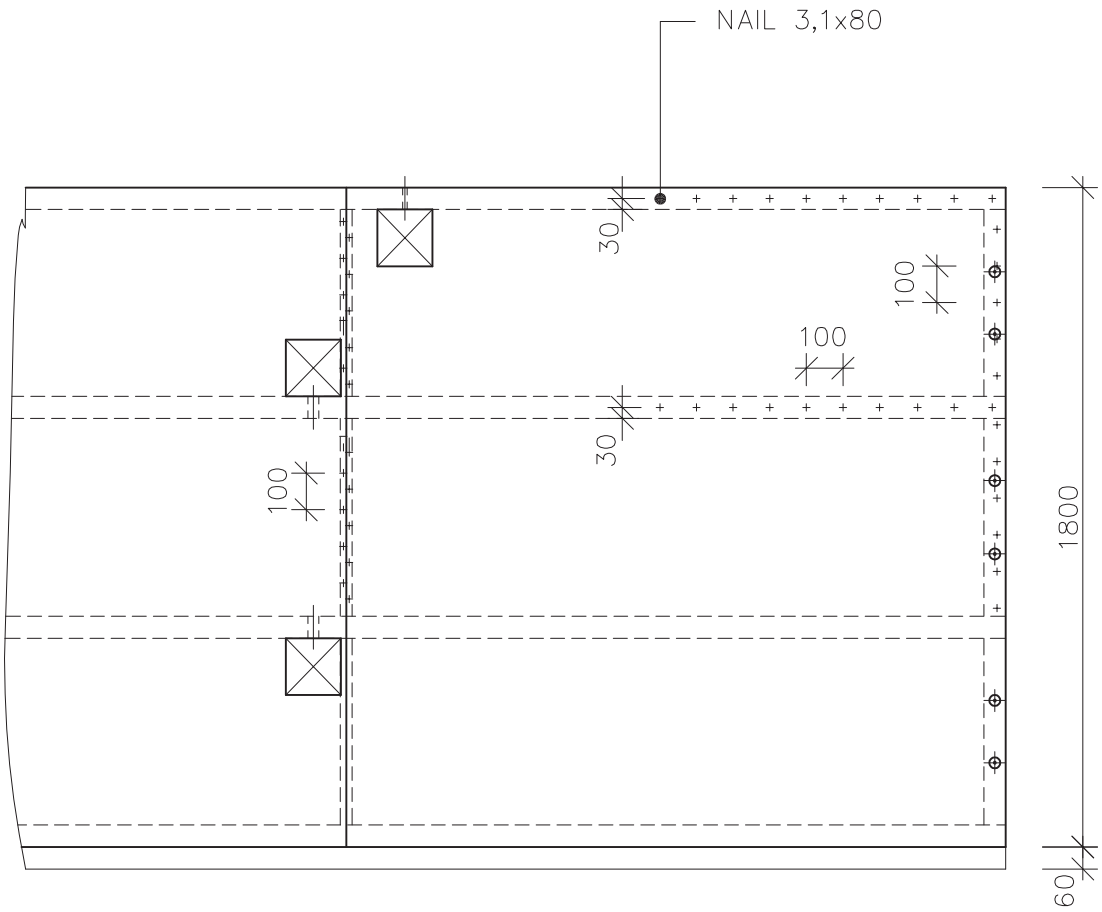

Scale applies to original 1:20	Remark: DETACHED HOUSE		Date					
	Worked out by:	HONIGSCHMIED MICHAL	01/06	Alternation	Date	Signature	Index	x
	Authorized by:							x
								x
								x
								x
RD RÝMAŘOV	Type:							
	FIXATION OF THE SHEATING ON THE FRAME – CEILING ATTIC					RD C 314		

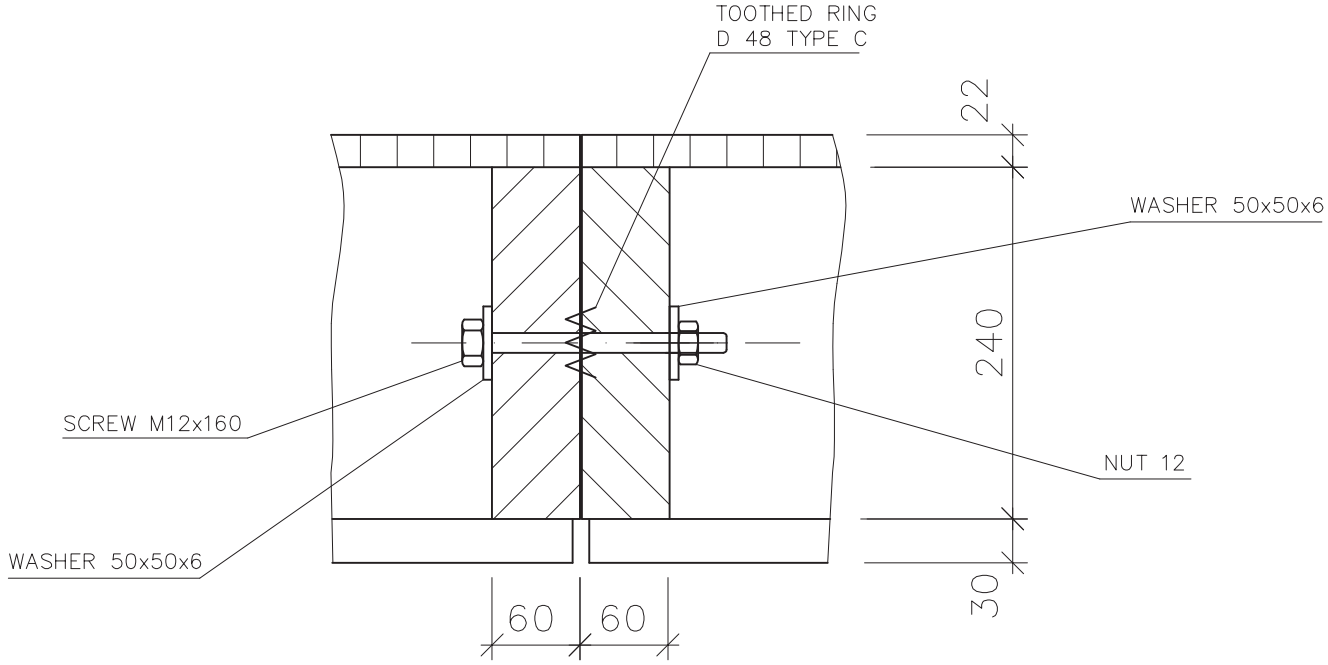

Scale applies to original 1:20	Remark: DETACHED HOUSE		Date				
	Worked out by:	HONIGSCHMIED MICHAL	01/06	Alternation	Date	Signature	Index x x x x x
	Authorized by:						
RD RÝMAŘOV	Type: RECIPROCAL CONNECTION OF CEILING ELEMENTS				RD C 321		

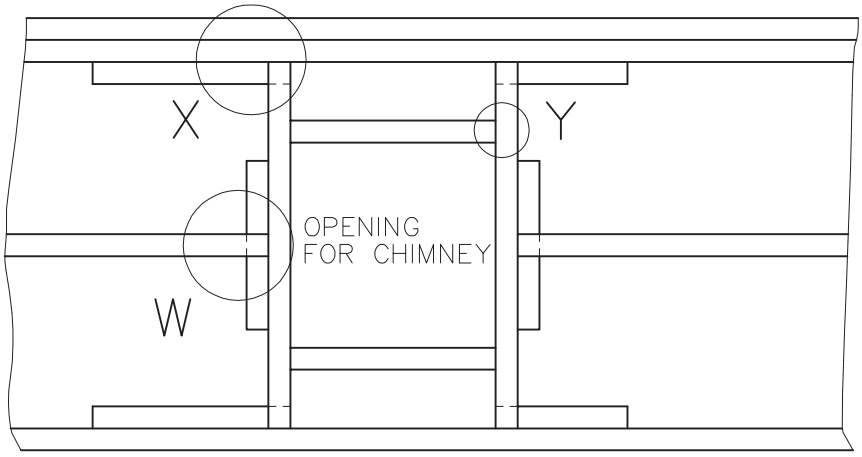

DETAIL ,,Y,,

M 2:1

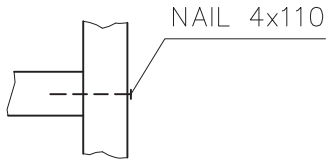

DETAIL ,,W,,

M 2:1

DETAIL ,,X,,

M 2:1

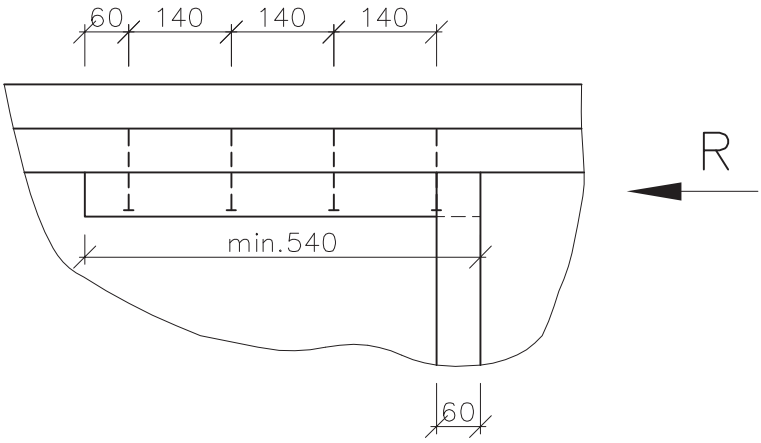

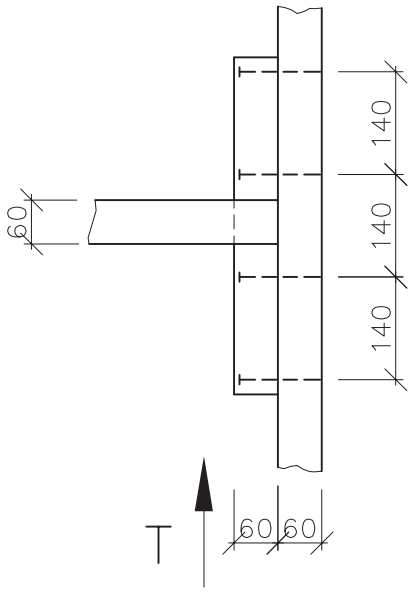

VIEW ,,T,,

M 2:1

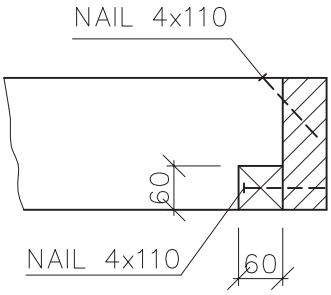

VIEW ,,R,,

M 2:1

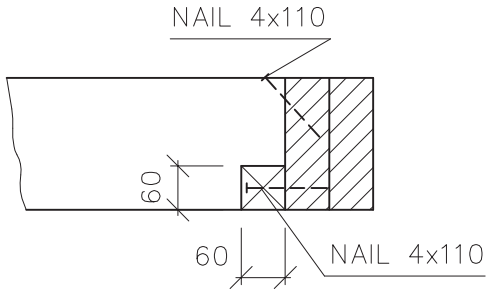

Scale applies to original 1:20	Remark: DETACHED HOUSE		Date				
	Worked out by:	HONIGSCHMIED MICHAL	01/06	Alternation	Date	Signature	Index x x x x x
	Authorized by:						
RD RÝMAŘOV	Type: DETAIL OF UNBEARING CEILING EXCHANGE					RD C 322	

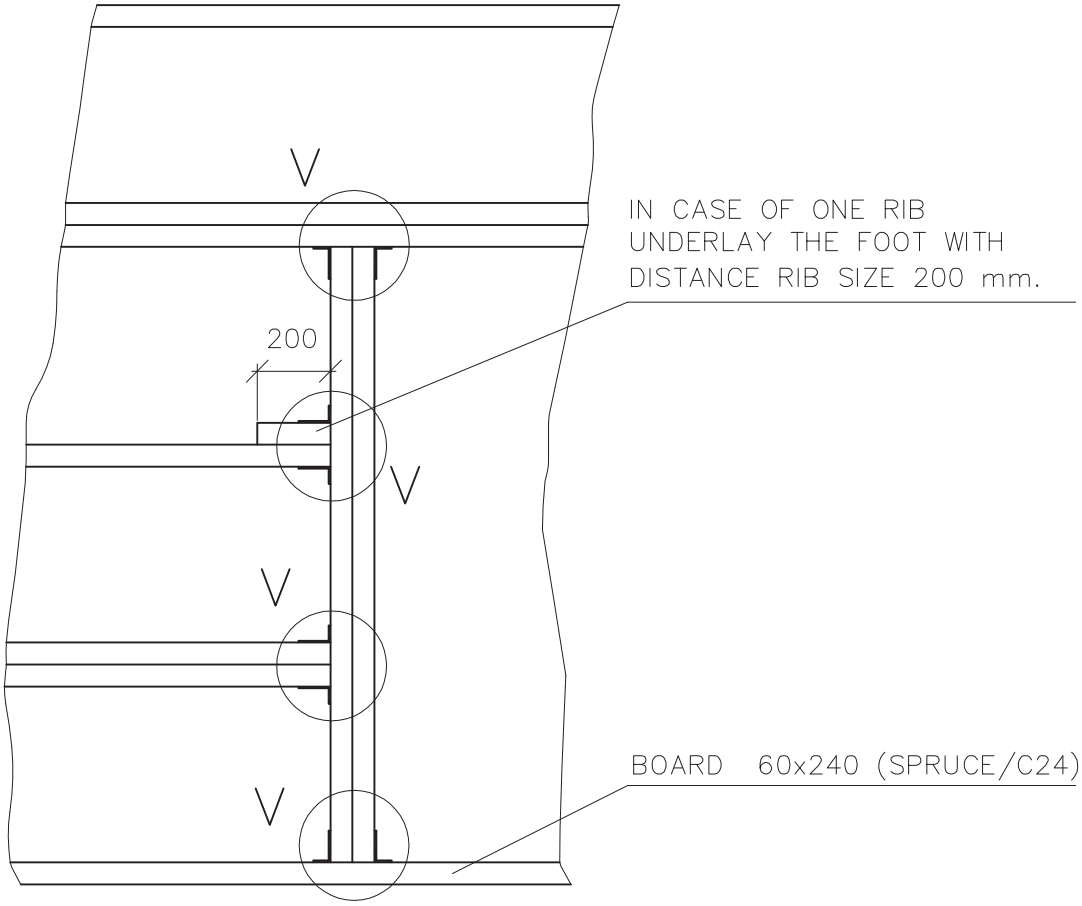

DETAIL ,,V,,

M 2:1

VIEW ,,S,,

M 2:1

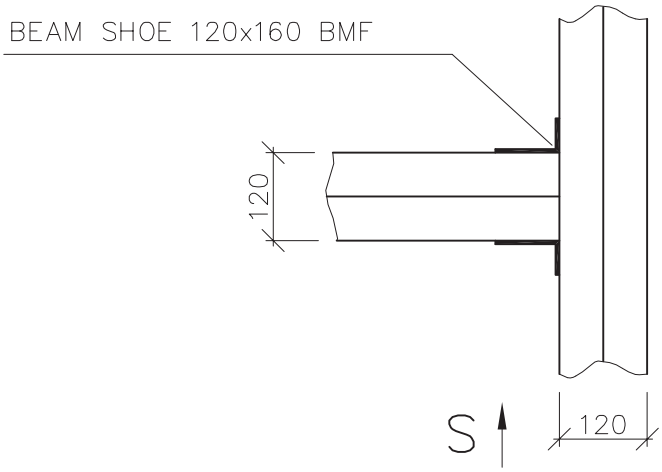

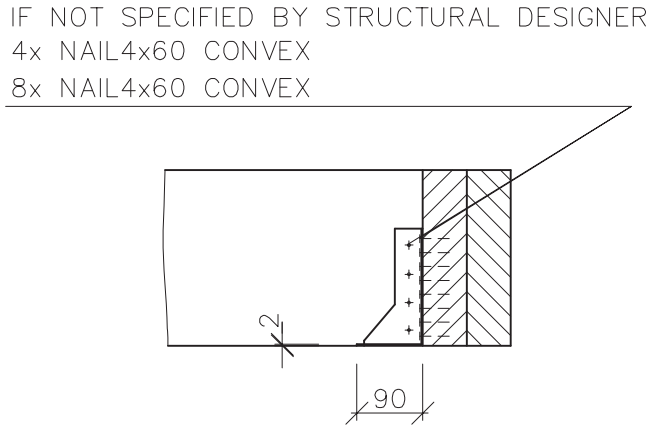

Scale applies to original 1:20	Remark: DETACHED HOUSE		Date				
	Worked out by:	HONIGSCHMIED MICHAL	01/06	Alternation	Date	Signature	Index x x x x x
	Authorized by:						
RD RÝMAŘOV	Type: DETAIL OF BEARING CEILING EXCHANGE				RD C 323		

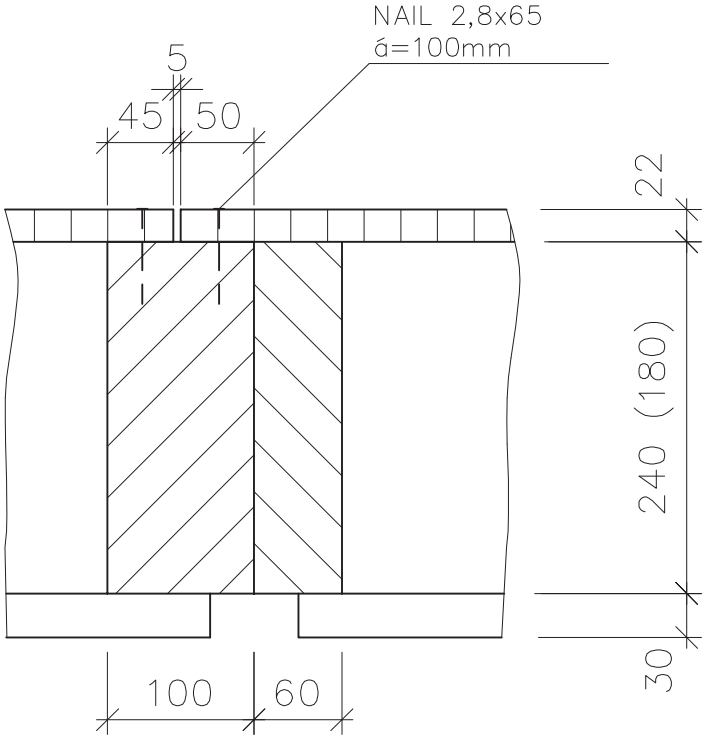

Scale applies to original 1:20	Remark: DETACHED HOUSE		Date				
	Worked out by:	HONIGSCHMIED MICHAL	01/06	Alternation	Date	Signature	Index x x x x x
	Authorized by:						
RD RÝMAŘOV	Type: RECIPROCAL CONNECTION OF CEILING ELEMENTS				RD C 324		

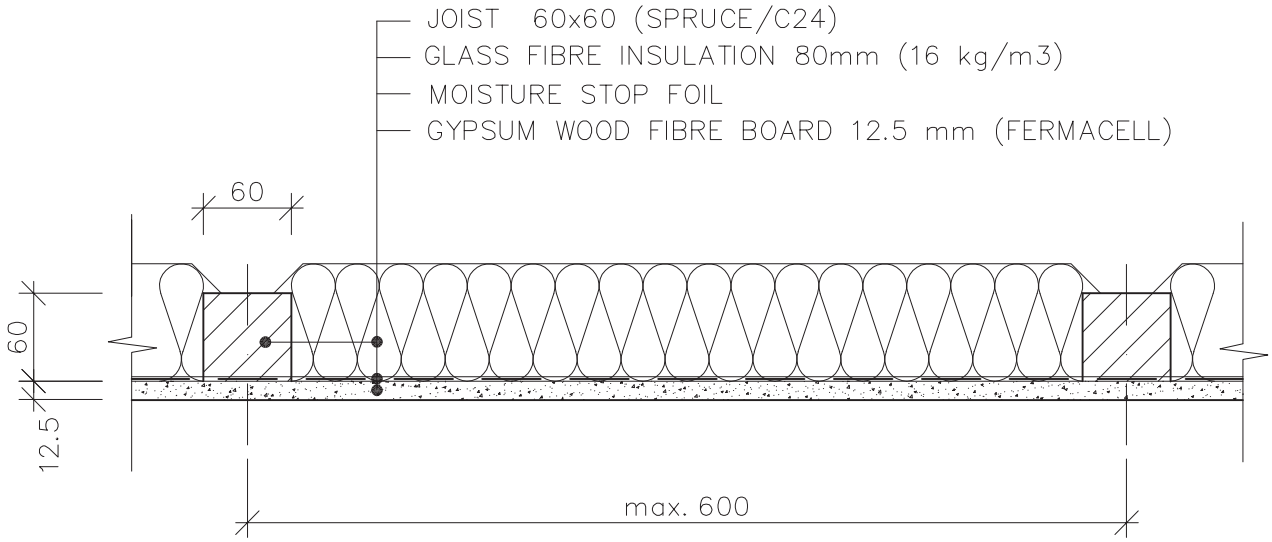

Scale applies to original 1:5	Remark: DETACHED HOUSE		Date				
	Worked out by:	HONIGSCHMIED MICHAL	01/06	Alternation	Date	Signature	Index x x x x x
	Authorized by:						
RD RÝMAŘOV	Type: CEILING TL. 72,5						
	HORIZONTAL SECTIONAL VIEW CEILING				RD C 331		

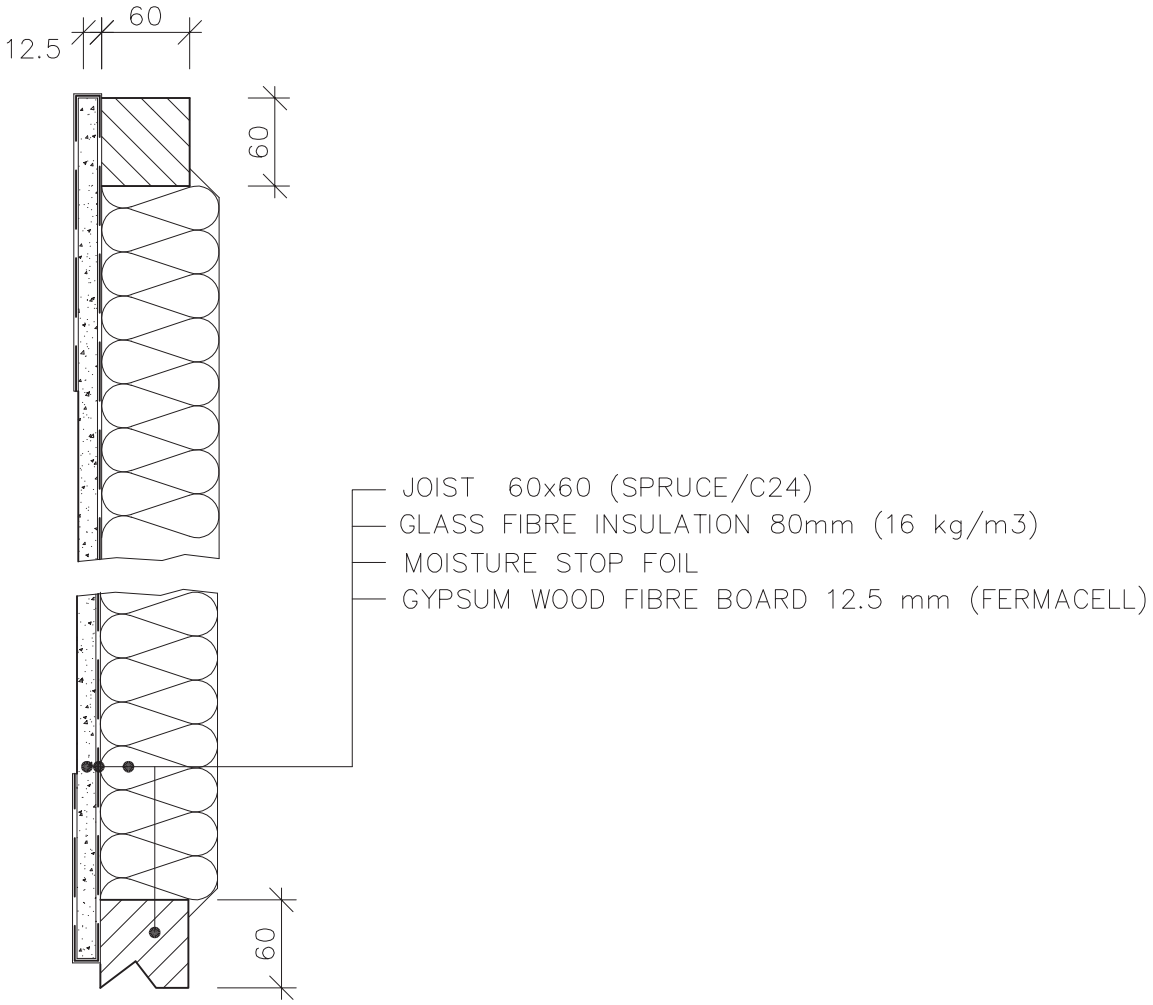

Scale applies to original 1:5	Remark: DETACHED HOUSE		Date				
	Worked out by:	HONIGSCHMIED MICHAL	01/06	Alternation	Date	Signature	Index
	Authorized by:						x x x x x
RD RÝMAŘOV	Type: CEILING TL. 72,5						
	VERTICAL SECTIONAL VIEW CEILING				RD C 332		

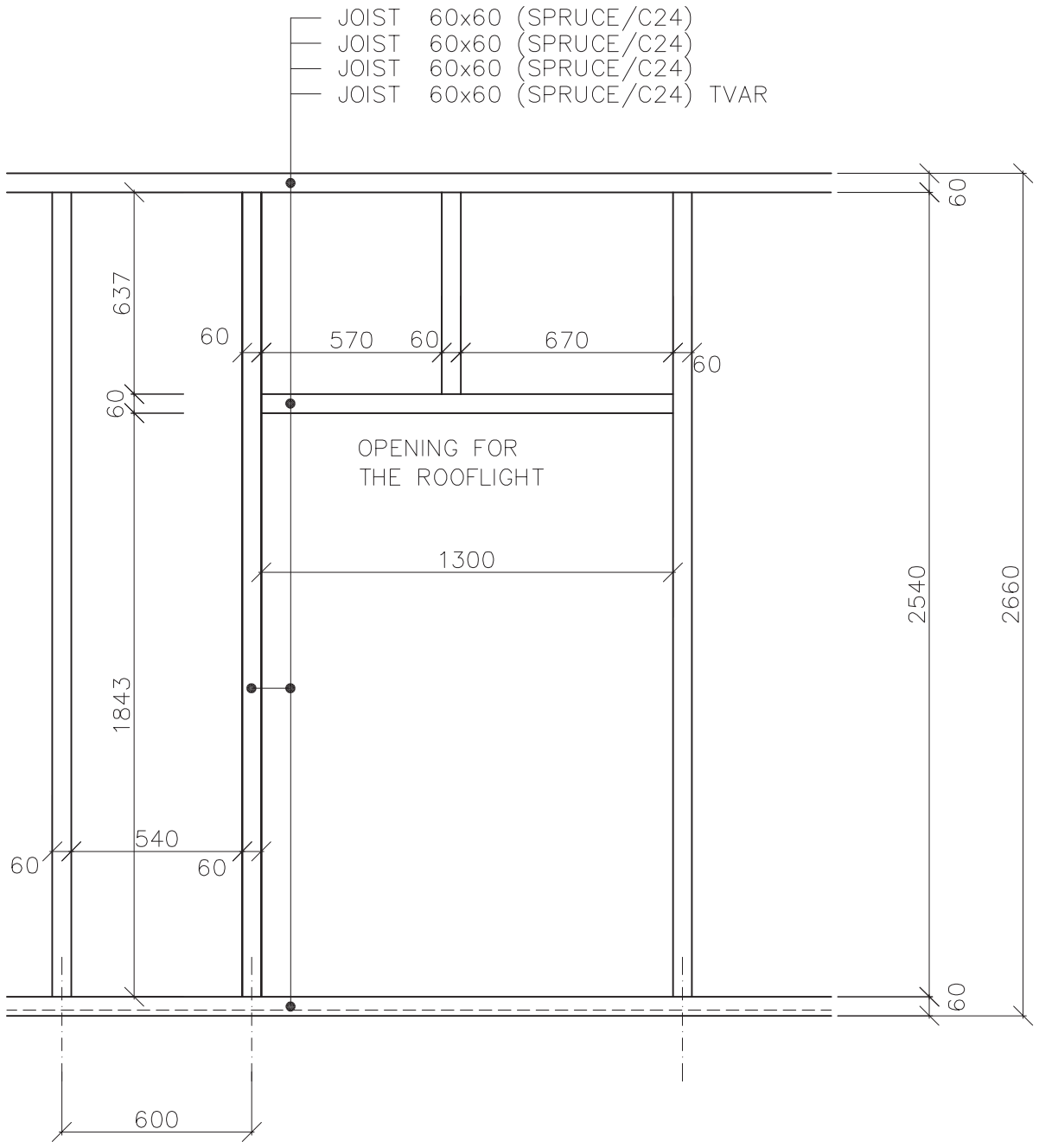

Scale applies to original 1:20	Remark: DETACHED HOUSE		Date				
	Worked out by:	HONIGSCHMIED MICHAL	01/06	Alternation	Date	Signature	Index x x x x x
	Authorized by:						
RD RÝMAŘOV	Type: CEILING TL. 72,5						
	VIEW OF THE FRAME – INCLINED CEILING				RD C 333		

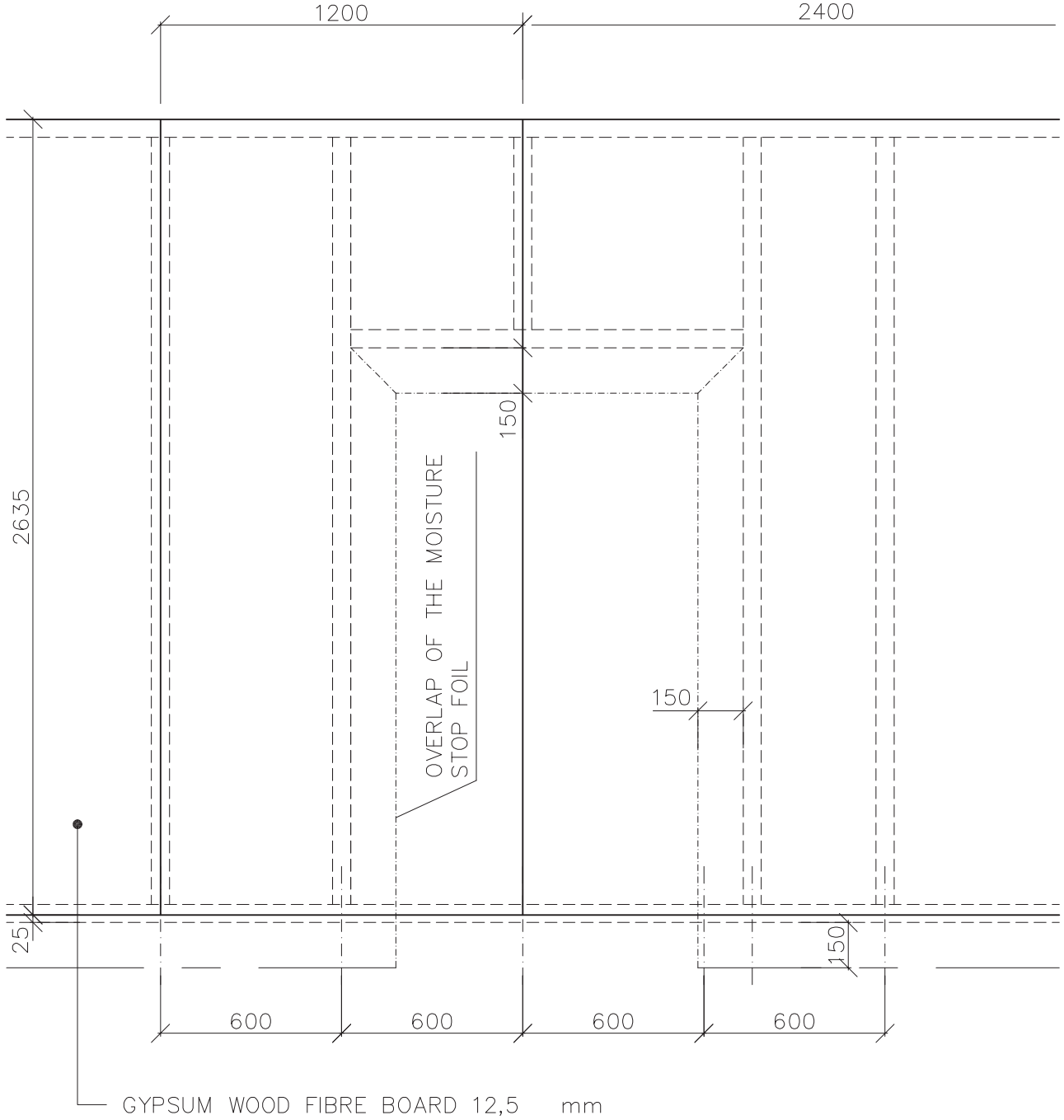

Scale applies to original 1:20	Remark: DETACHED HOUSE		Date				
	Worked out by:	HONIGSCHMIED MICHAL	01/06	Alternation	Date	Signature	Index x x x x x
	Authorized by:						
RD RÝMAŘOV	Type: CEILING TL. 72,5						
	VIEW OF THE SHEATHING – INCLINED CEILING						RD C 334

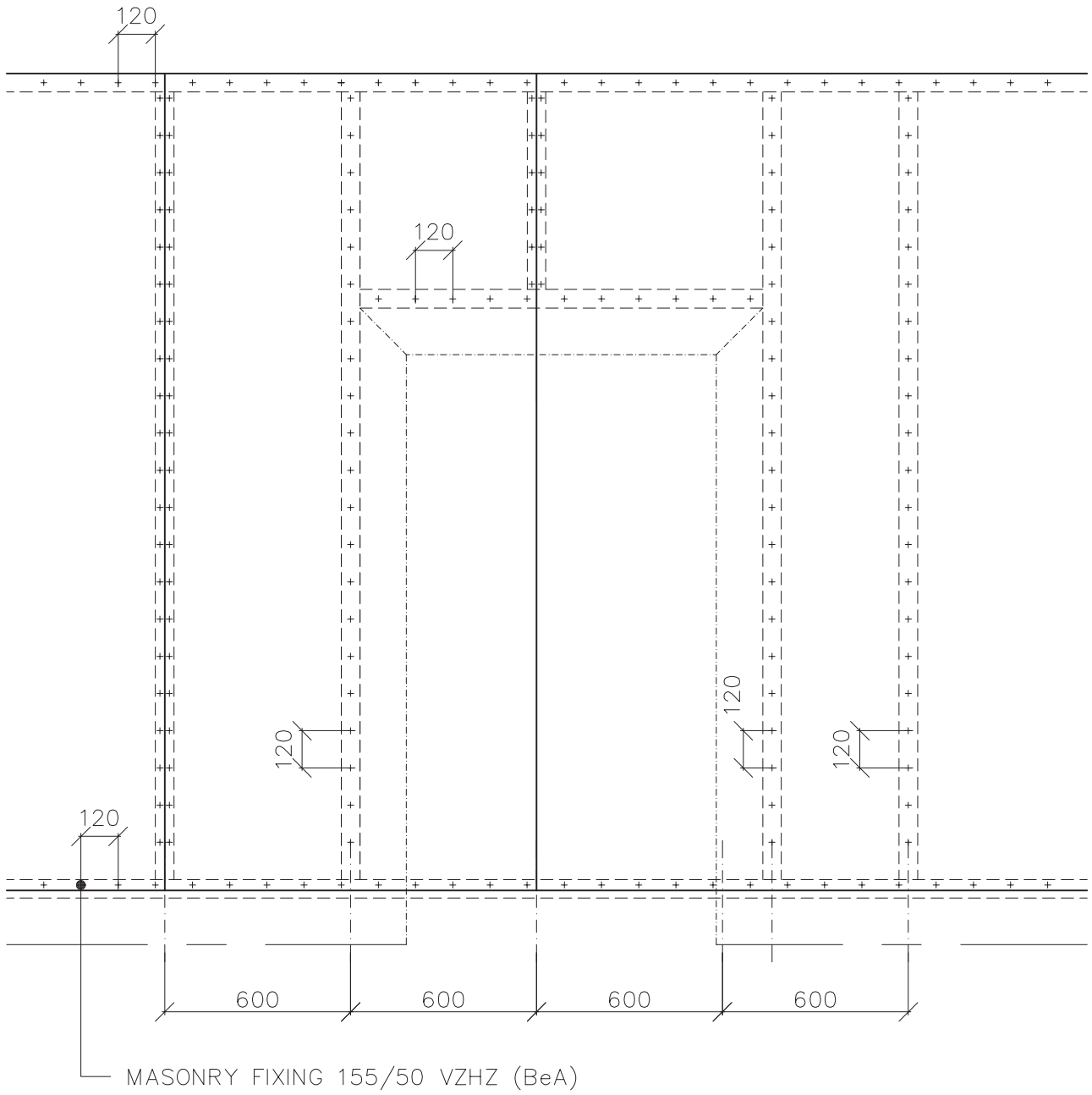

Scale applies to original 1:20	Remark: DETACHED HOUSE		Date				
	Worked out by:	HONIGSCHMIED MICHAL	01/06	Alternation	Date	Signature	Index x x x x x
	Authorized by:						
RD RÝMAŘOV	Type: CEILING TL. 72,5						
	FIXATION OF THE SHEATHING ON THE FRAME – INCLINED CEILING						RD C 335

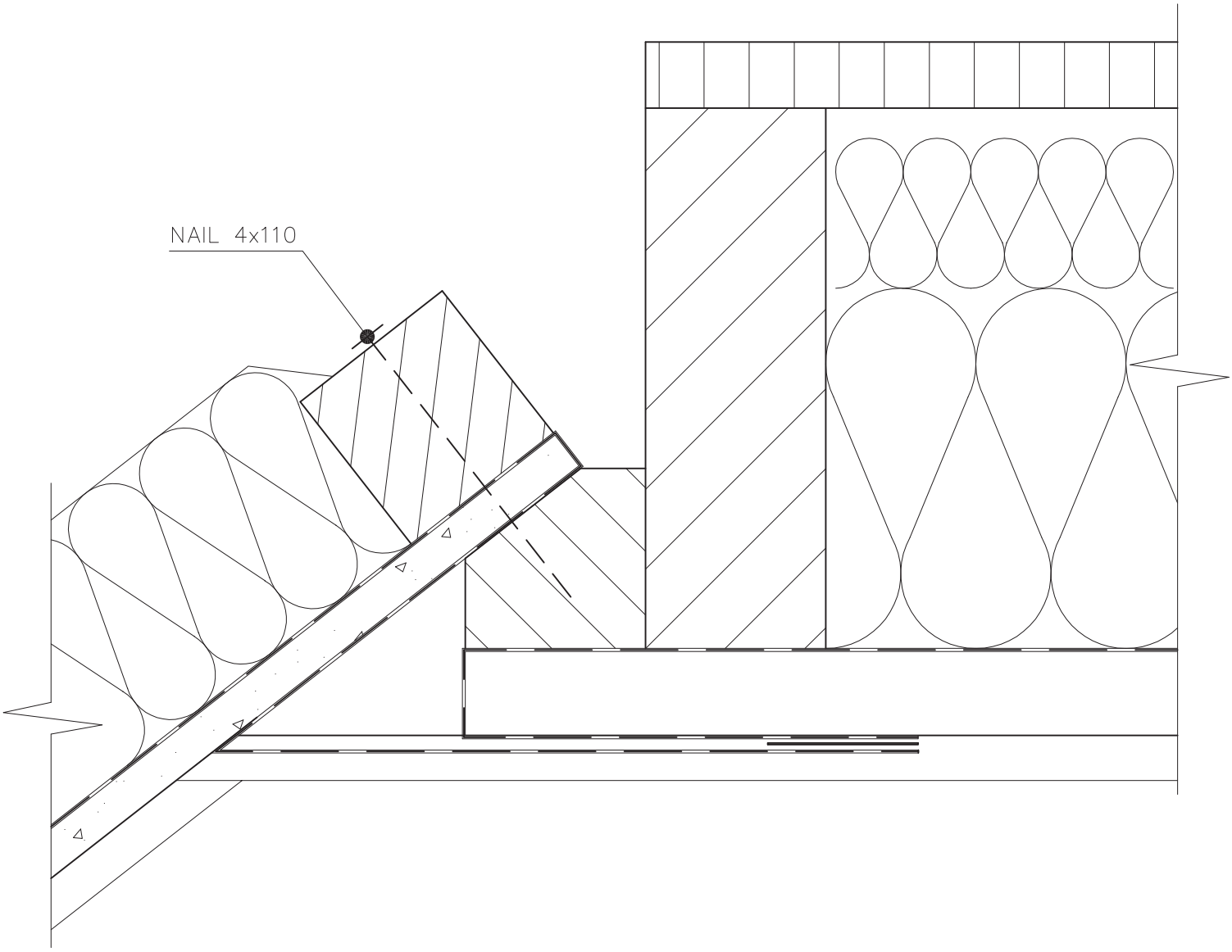

Scale applies to original 1:2	Remark: DETACHED HOUSE		Date				
	Worked out by:	HONIGSCHMIED MICHAL	01/06	Alternation	Date	Signature	Index x x x x x
	Authorized by:						
RD RÝMAŘOV	Type: INCLINED CEILING CONNECTION WITH ATTIC CEILING				RD C 341		

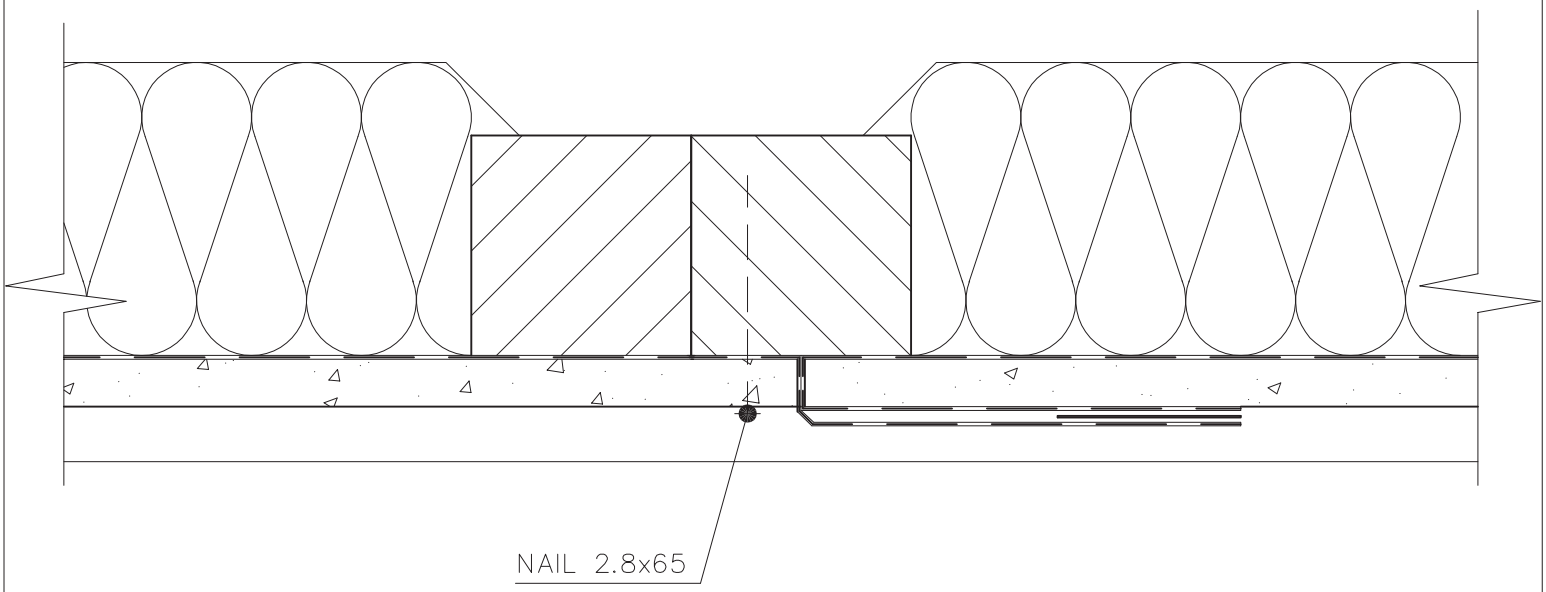

Scale applies to original 1:2	Remark: DETACHED HOUSE		Date				
	Worked out by:	HONIGSCHMIED MICHAL	01/06	Alternation	Date	Signature	Index
	Authorized by:						x x x x x
RD RÝMAŘOV	Type: RECIPROCAL CONNECTION OF INCLINED CEILINGS				RD C 342		

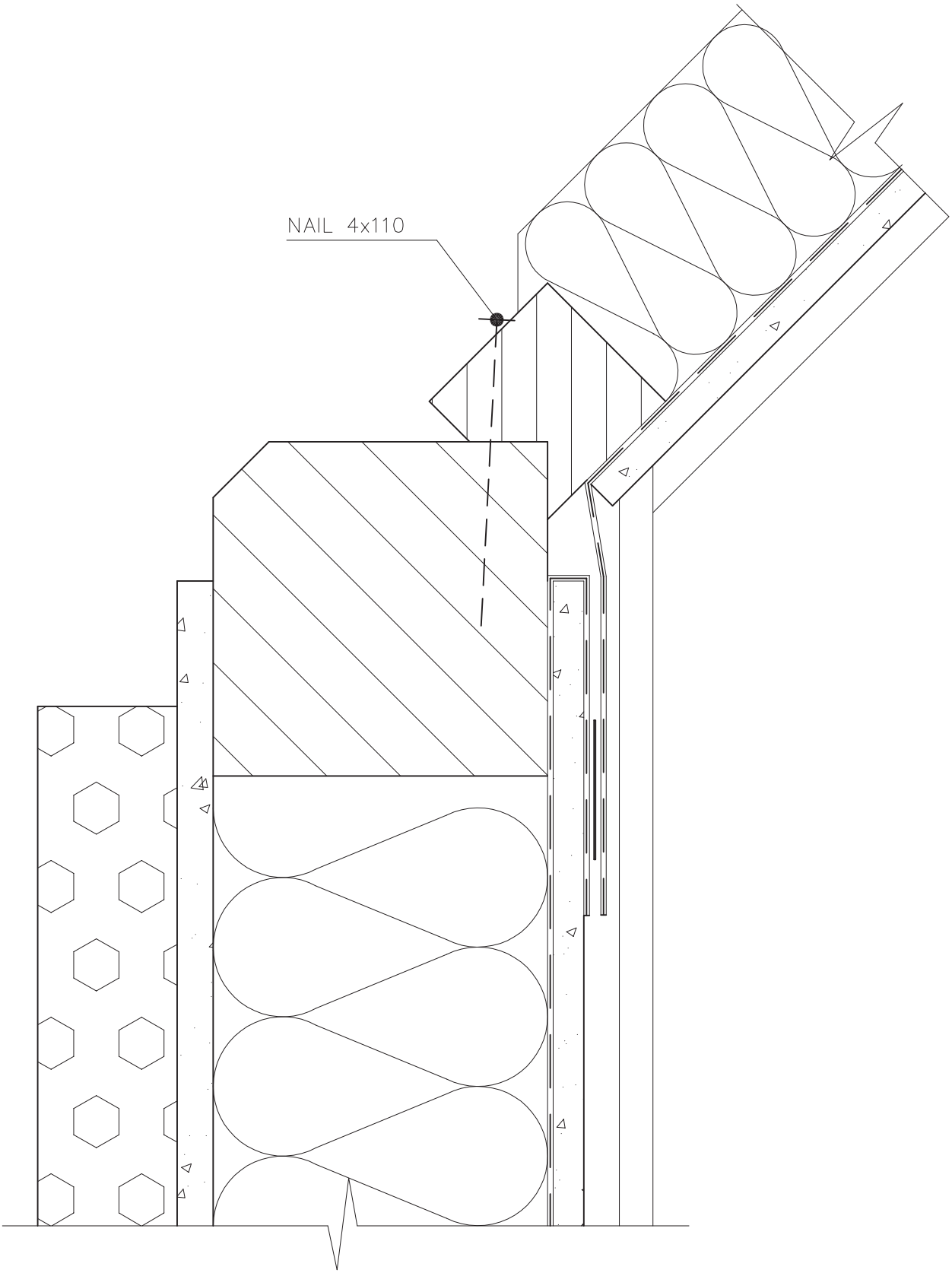

Scale applies to original 1:2	Remark: DETACHED HOUSE		Date				
	Worked out by:	HONIGSCHMIED MICHAL	01/06	Alternation	Date	Signature	Index
	Authorized by:						x x x x x
RD RÝMAŘOV	Type: VERTICAL WALL CONNECTION WITH INCLINED CEILING						RD C 343

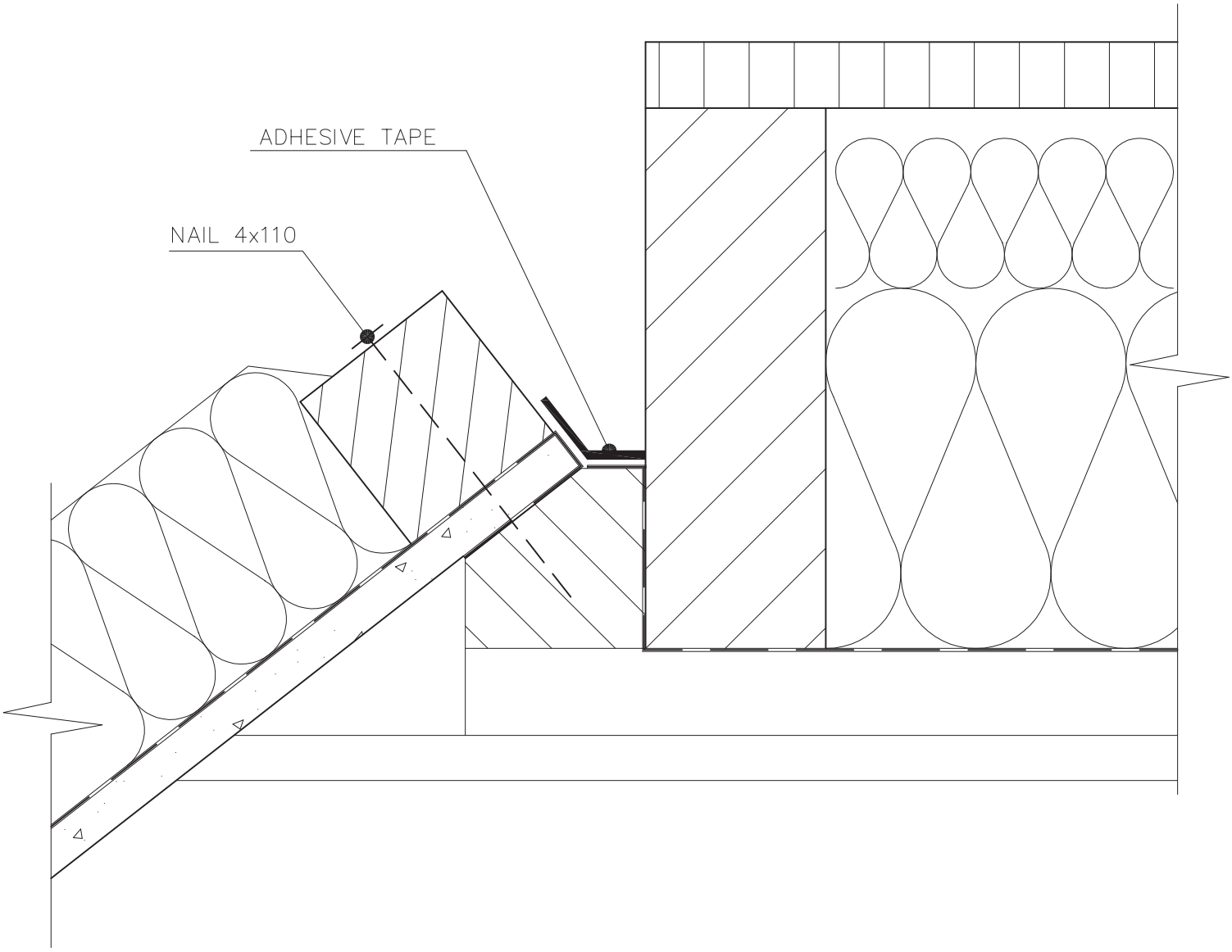

Scale applies to original 1:2	Remark: DETACHED HOUSE		Date				
	Worked out by:	HONIGSCHMIED MICHAL	01/06	Alternation	Date	Signature	Index x x x x x
	Authorized by:						
RD RÝMAŘOV	Type: INCLINED CEILING CONNECTION WITH ATTIC CEILING				RD C 344		

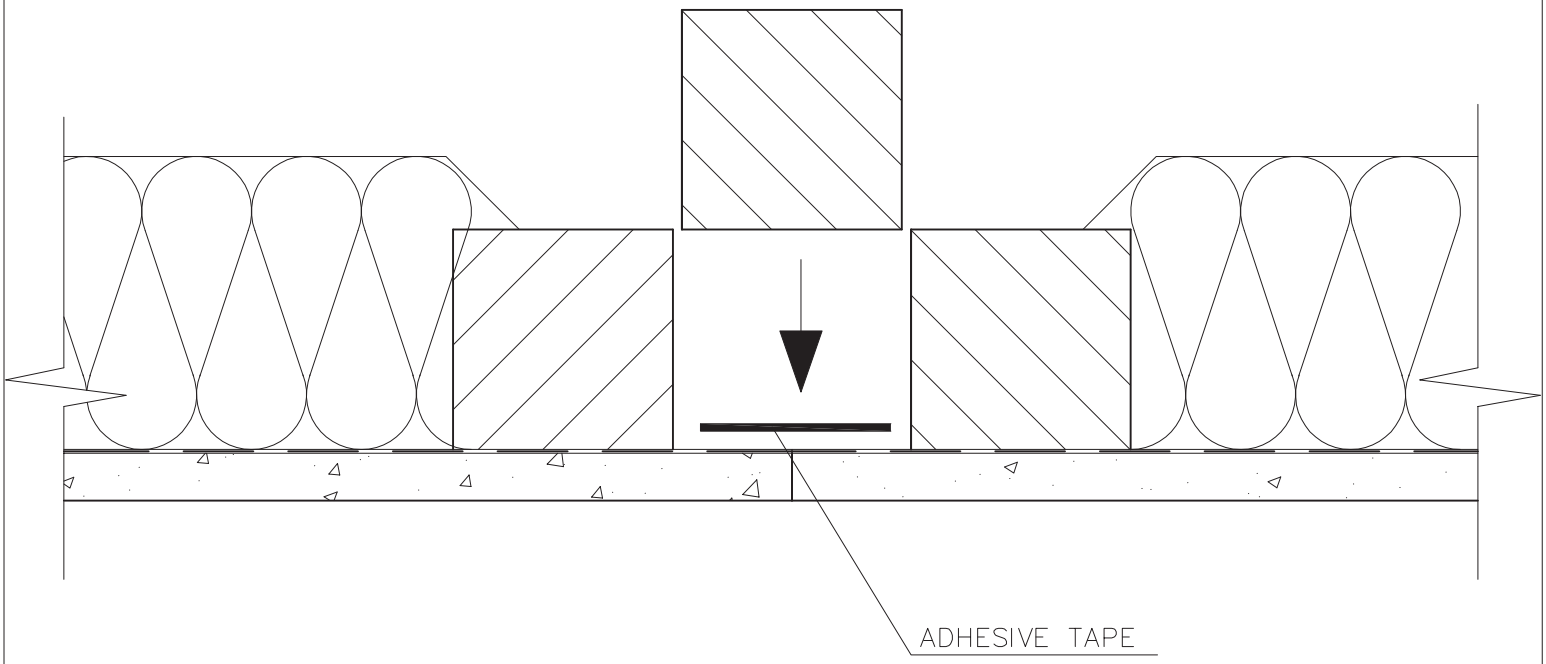

Scale applies to original 1:2	Remark: DETACHED HOUSE		Date				
	Worked out by:	HONIGSCHMIED MICHAL	01/06	Alternation	Date	Signature	Index
	Authorized by:						
							x
							x
							x
							x
							x

RD RÝMAŘOV	Type:	
	RECIPROCAL CONNECTION OF INCLINED CEILINGS	RD C 345

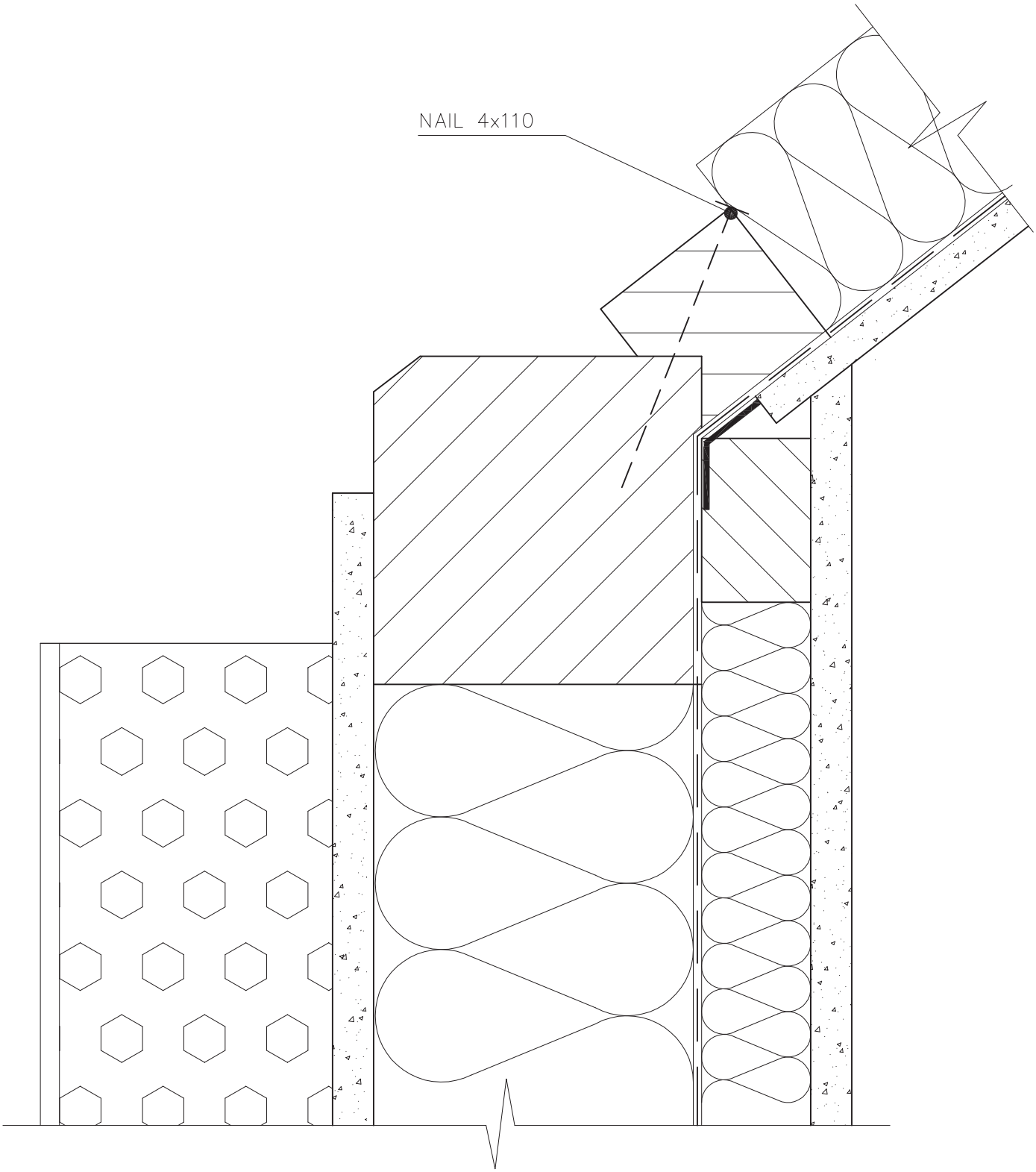

Scale applies to original 1:2	Remark: DETACHED HOUSE		Date				
	Worked out by:	HONIGSCHMIED MICHAL	01/06	Alternation	Date	Signature	Index
	Authorized by:						x x x x x
RD RÝMAŘOV	Type: VERTICAL WALL CONNECTION WITH INCLINED CEILING				RD C 346		

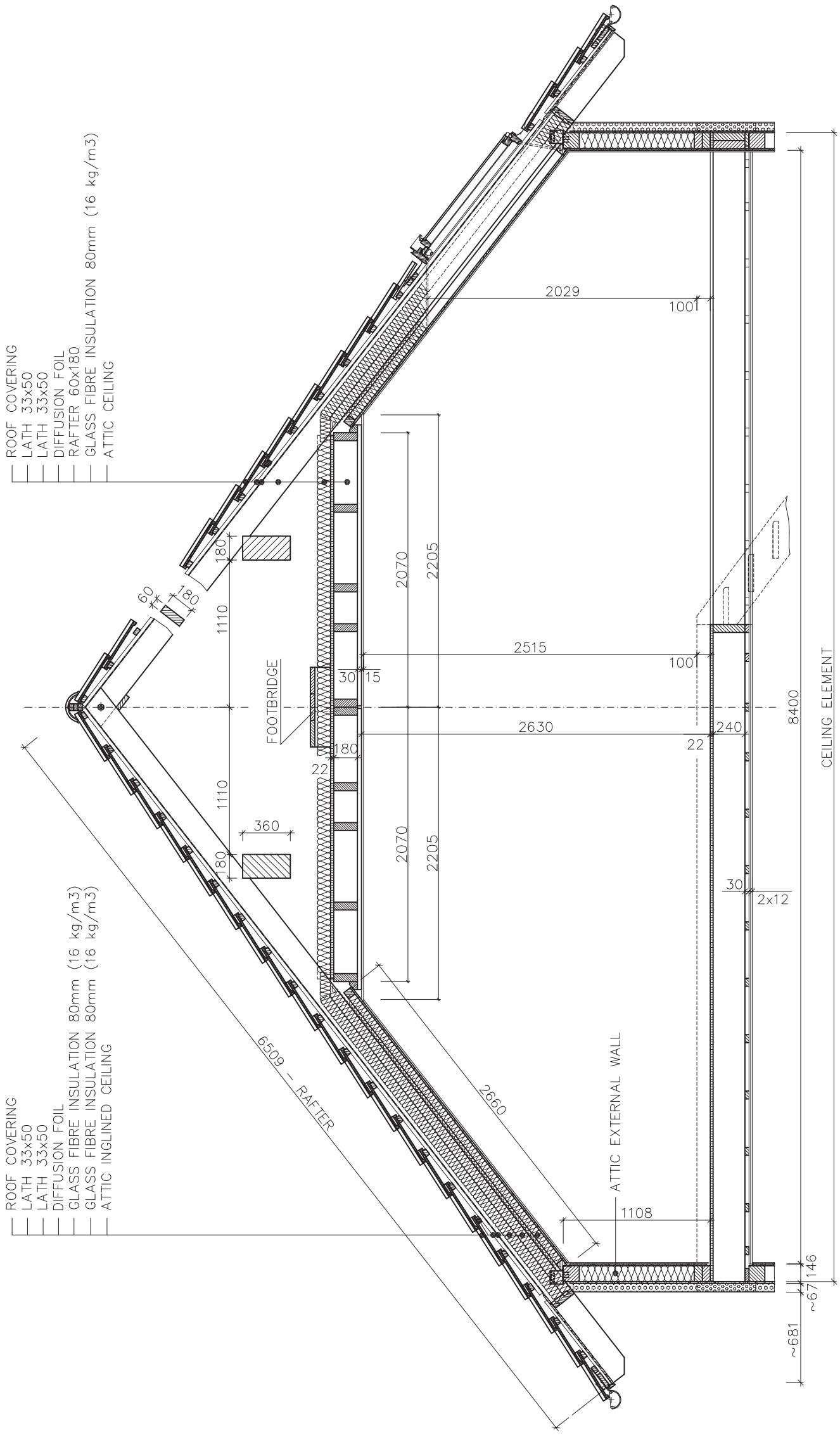

Scale applies to original 1:50	Remark: DETACHED HOUSE		Date				
	Worked out by:	HONIGSCHMIED MICHAL	01/06	Alternation	Date	Signature	Index x x x x x
	Authorized by:						
RD RÝMAŘOV	Type: VERTICAL SECTION OF ROOF CONSTRUCTION – PURLIN						RD C 401

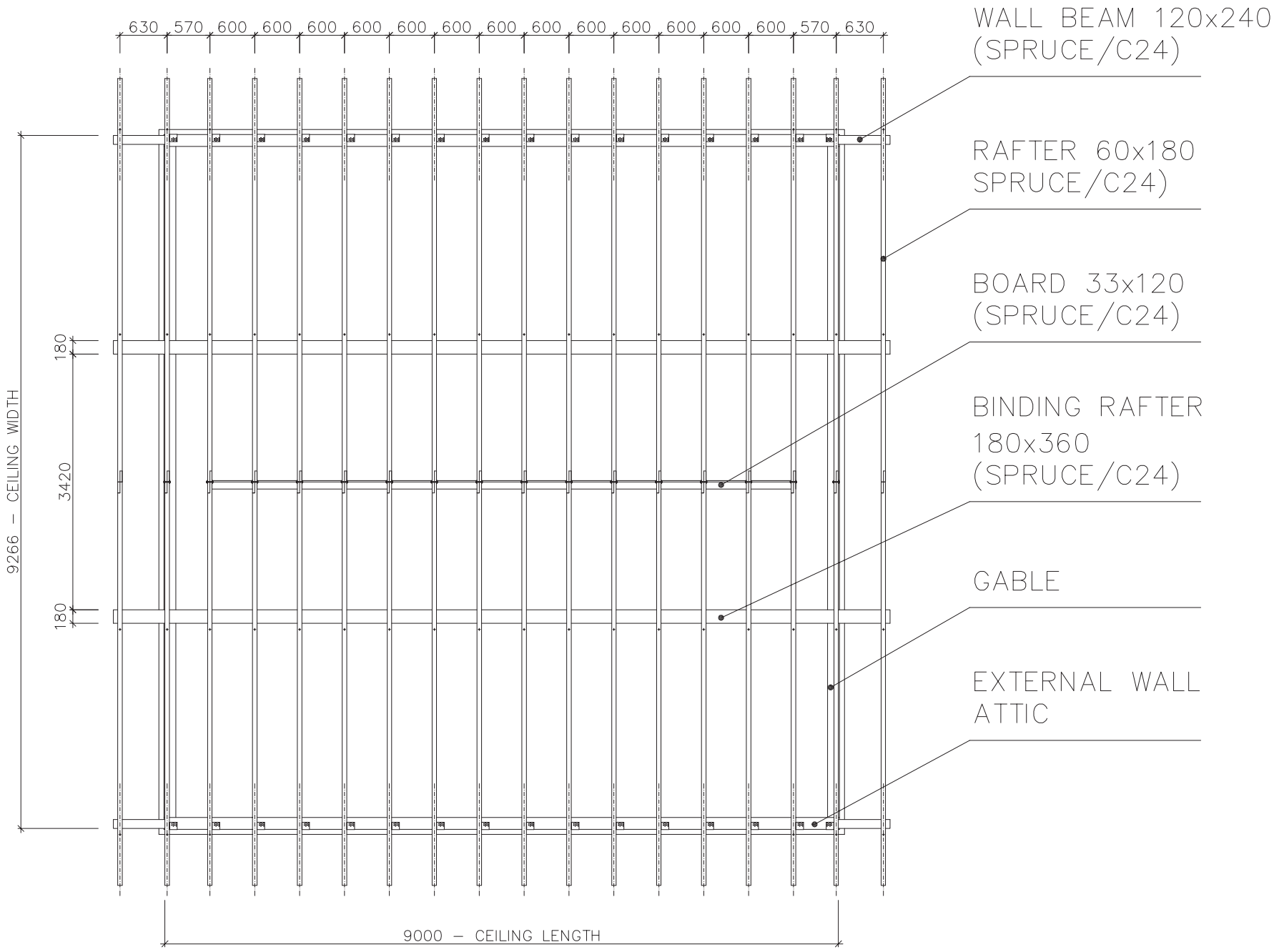

Scale applies to original 1:100	Remark: DETACHED HOUSE – PREMIO 89/38°		Date				
	Worked out by:	Jánošík Tomáš	01/06	Alternation	Date	Signature	Index
	Authorized by:						x x x x x
RD RÝMAŘOV	Type: BINDING RAFTER ROOF						
	HORIZONTAL SECTIONAL VIEW OF THE ROOF – PURLIN						RD C 402

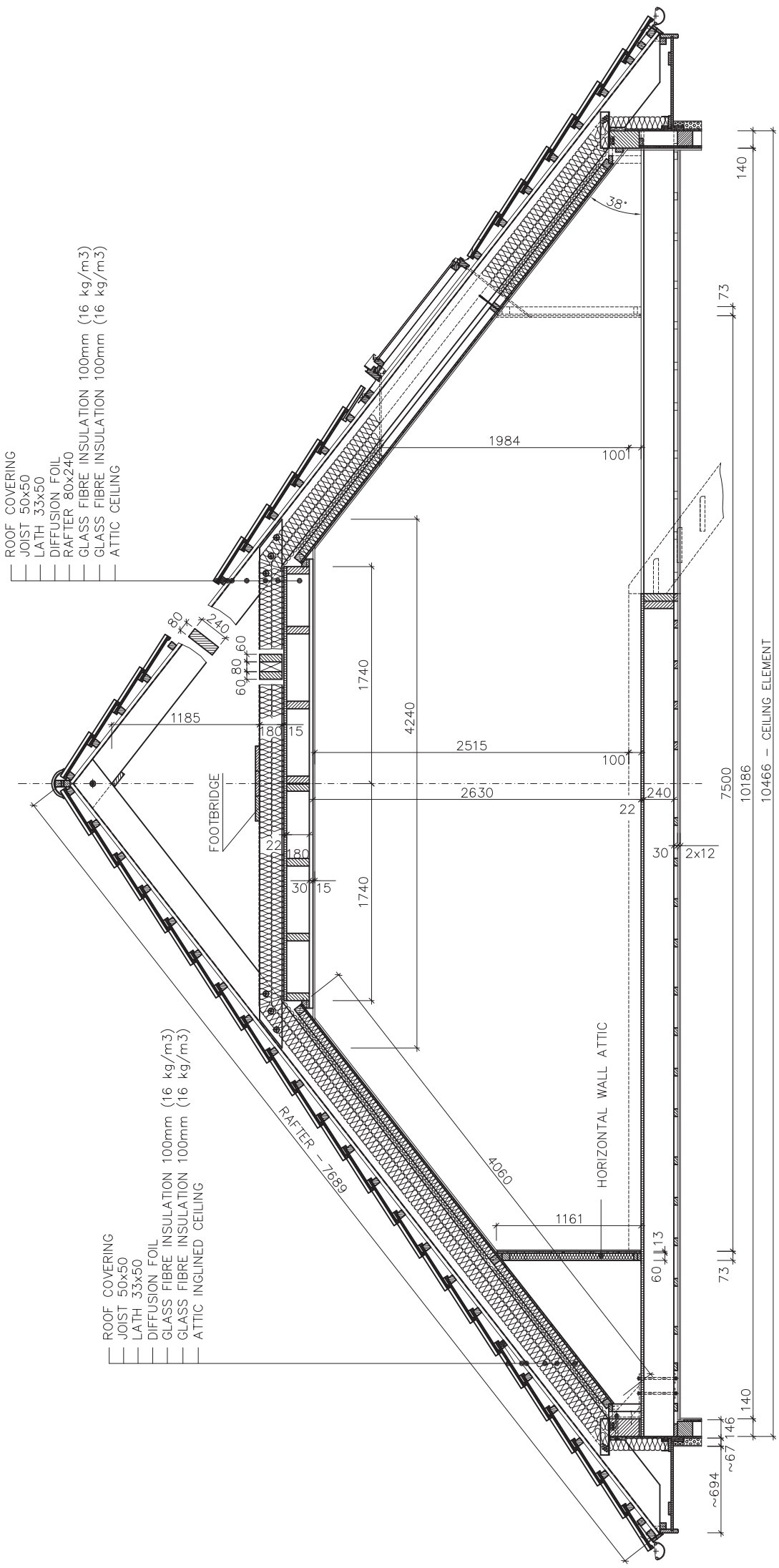

Scale applies to original 1:50	Remark: DETACHED HOUSE		Date				
	Worked out by:	HONIGSCHMIED MICHAL	01/06	Alternation	Date	Signature	Index
	Authorized by:						
	Type:						
RD RÝMAŘOV	VERTICAL SECTION OF ROOF CONSTRUCTION – COLLAR BEAM						RD C 403

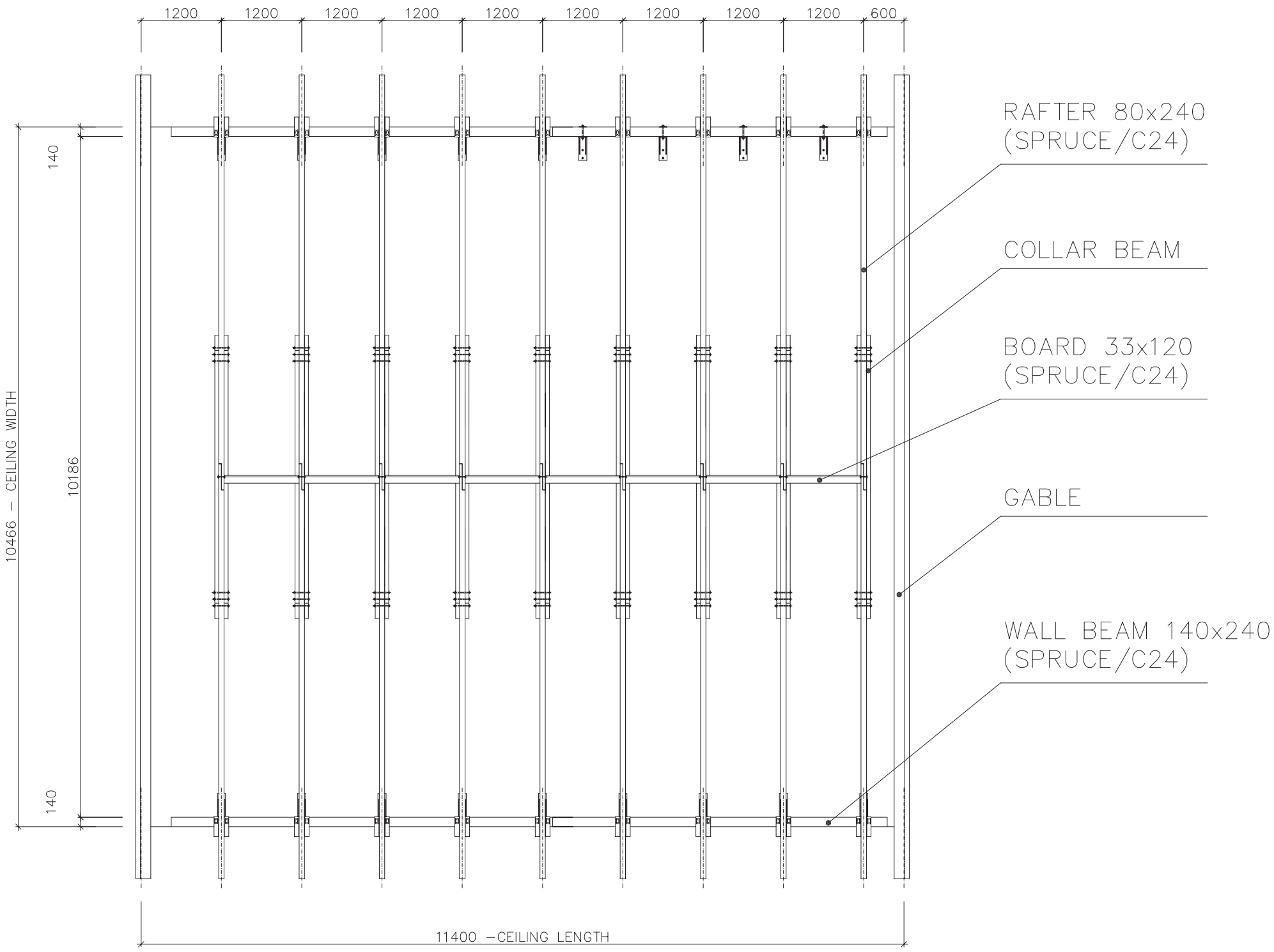

Scale applies to original 1:100	Remark: DETACHED HOUSE – KK 117/38°		Date				
	Worked out by:	Jánošík Tomáš	01/06	Alternation	Date	Signature	Index
	Authorized by:						x x x x x
RD RÝMAŘOV	Type: COLLAR BEAM ROOF						
	HORIZONTAL SECTIONAL VIEW OF THE ROOF – COLLAR BEAM					RD C 404	

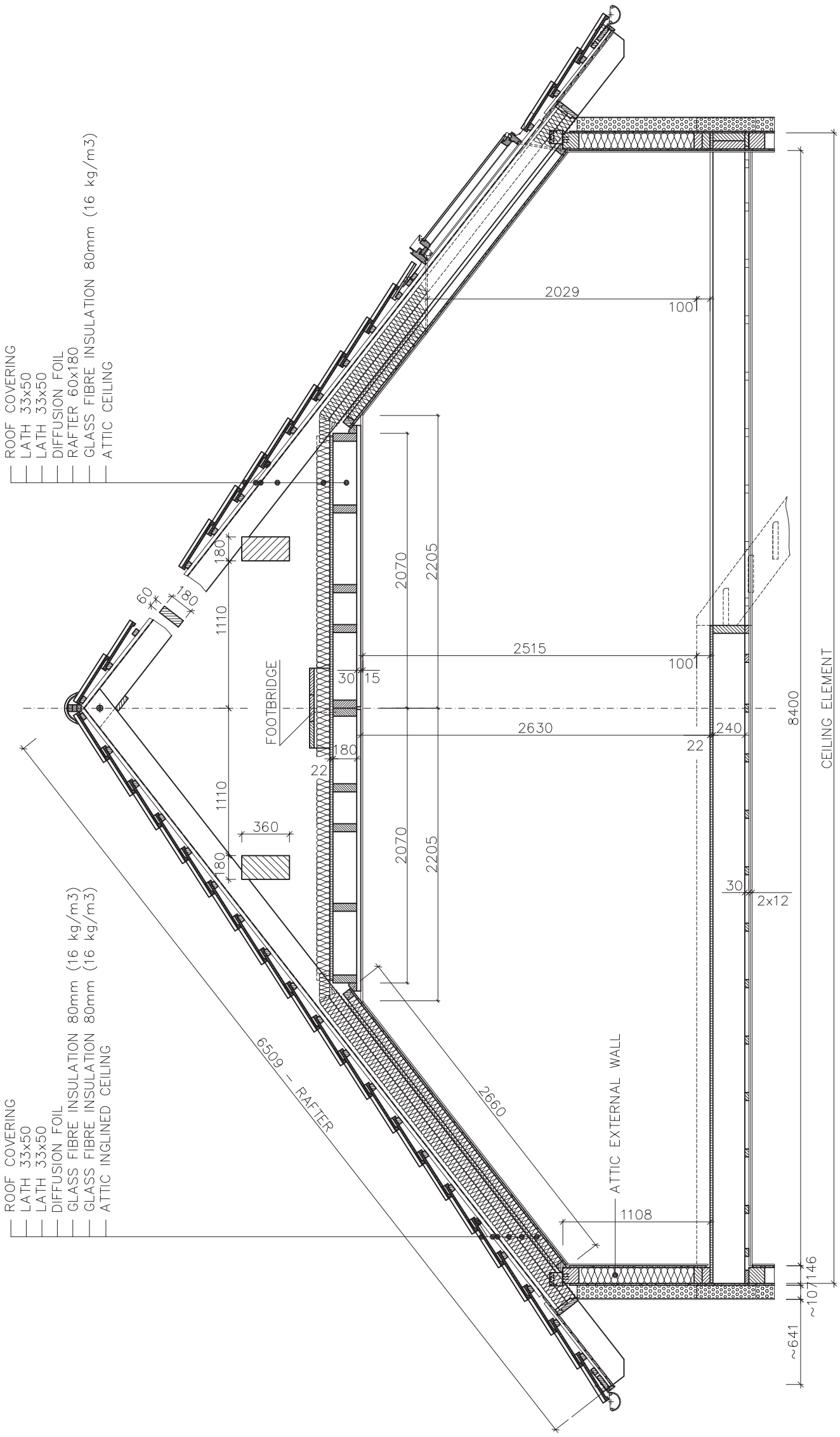

Scale applies to original 1:50	Remark: DETACHED HOUSE		Date				
	Worked out by:	Ing. Pavel Krupa	09/07	Alternation	Date	Signature	Index
	Authorized by:	Tomáš Jánošík	09/07				x x x x x

RD RÝMAŘOV

Type:

VERTICAL SECTION OF ROOF CONSTRUCTION – PURLIN

RD C 405

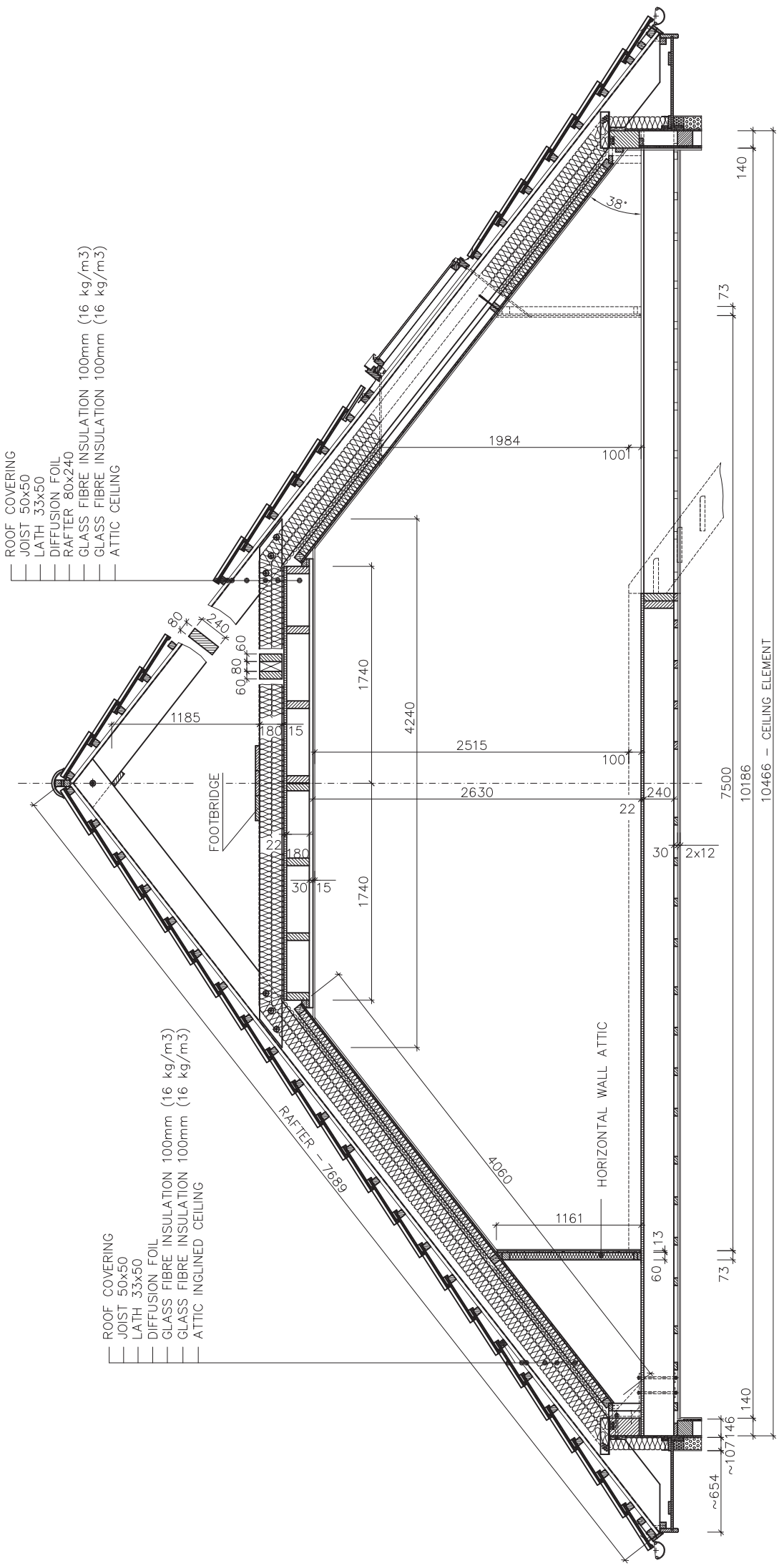

Scale applies to original 1:50	Remark: DETACHED HOUSE		Date				
	Worked out by:	Ing. Pavel Krupa	09/07	Alternation	Date	Signature	Index
	Authorized by:	Tomáš Jánošík	09/07				x x x x x

RD RÝMAŘOV

Type:

VERTICAL SECTION OF ROOF CONSTRUCTION – COLLAR BEAM

RD C 406

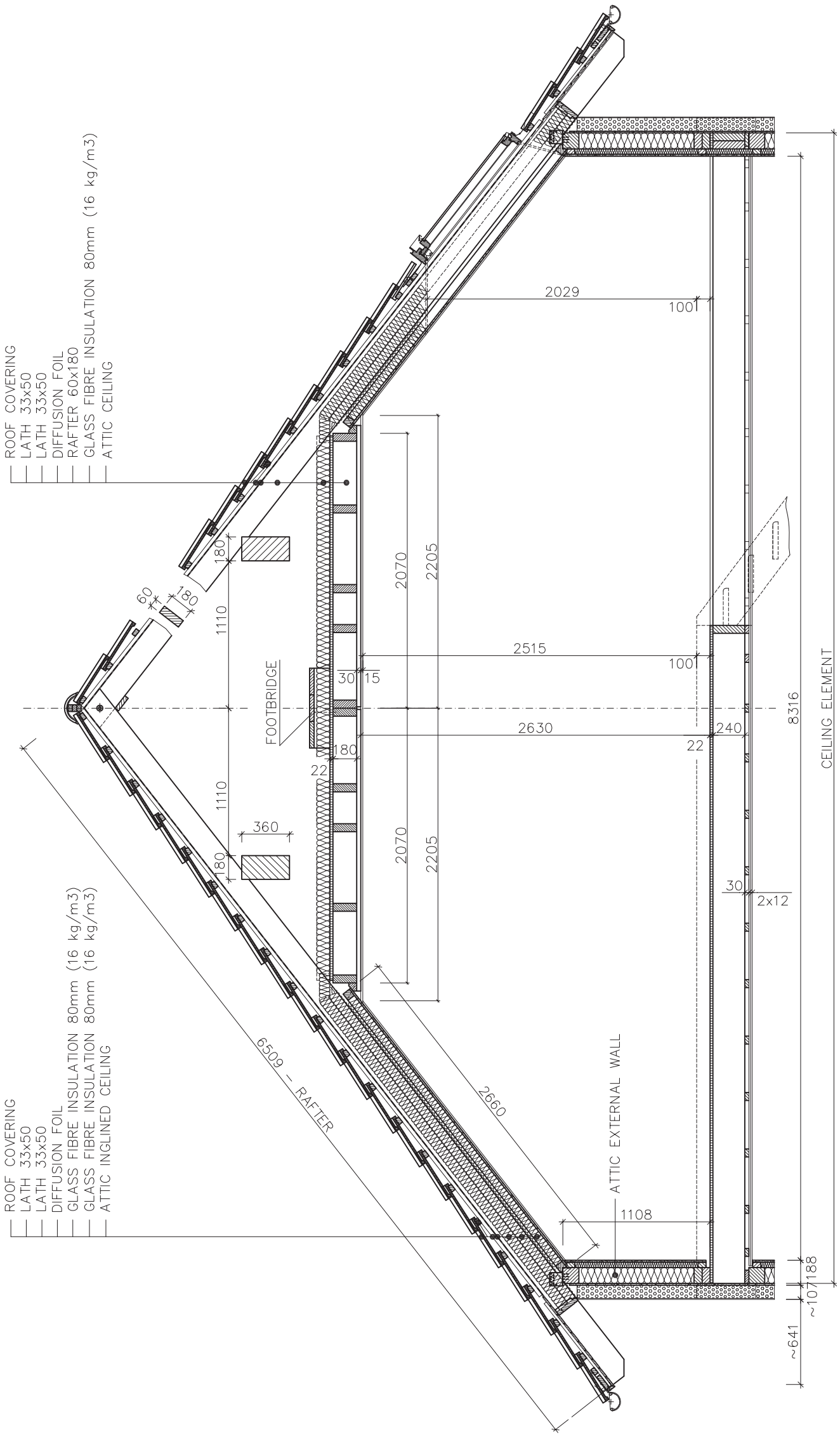

Scale applies to original 1:50	Remark: DETACHED HOUSE		Date				
	Worked out by:	Ing. Pavel Krupa	09/07	Alternation	Date	Signature	Index
	Authorized by:	Tomáš Jánošík	09/07				

RD RÝMAŘOV

Type:

VERTICAL SECTION OF ROOF CONSTRUCTION – PURLIN

RD C 407

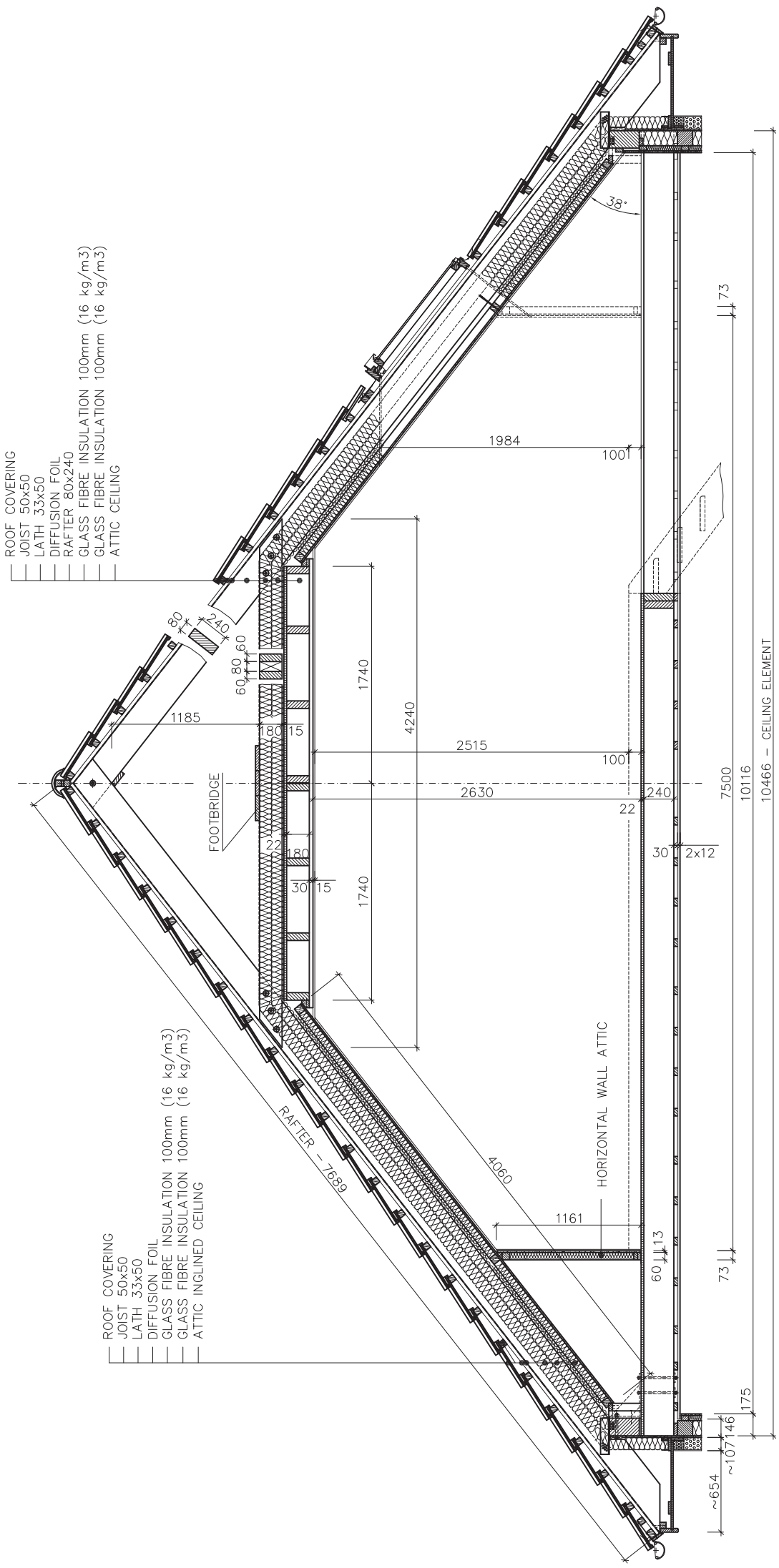

Scale applies to original 1:50	Remark: DETACHED HOUSE		Date				
	Worked out by:	Ing. Pavel Krupa	09/07	Alternation	Date	Signature	Index
	Authorized by:	Tomáš Jánošík	09/07				

RD RÝMAŘOV

Type:

VERTICAL SECTION OF ROOF CONSTRUCTION – COLLAR BEAM

RD C 408

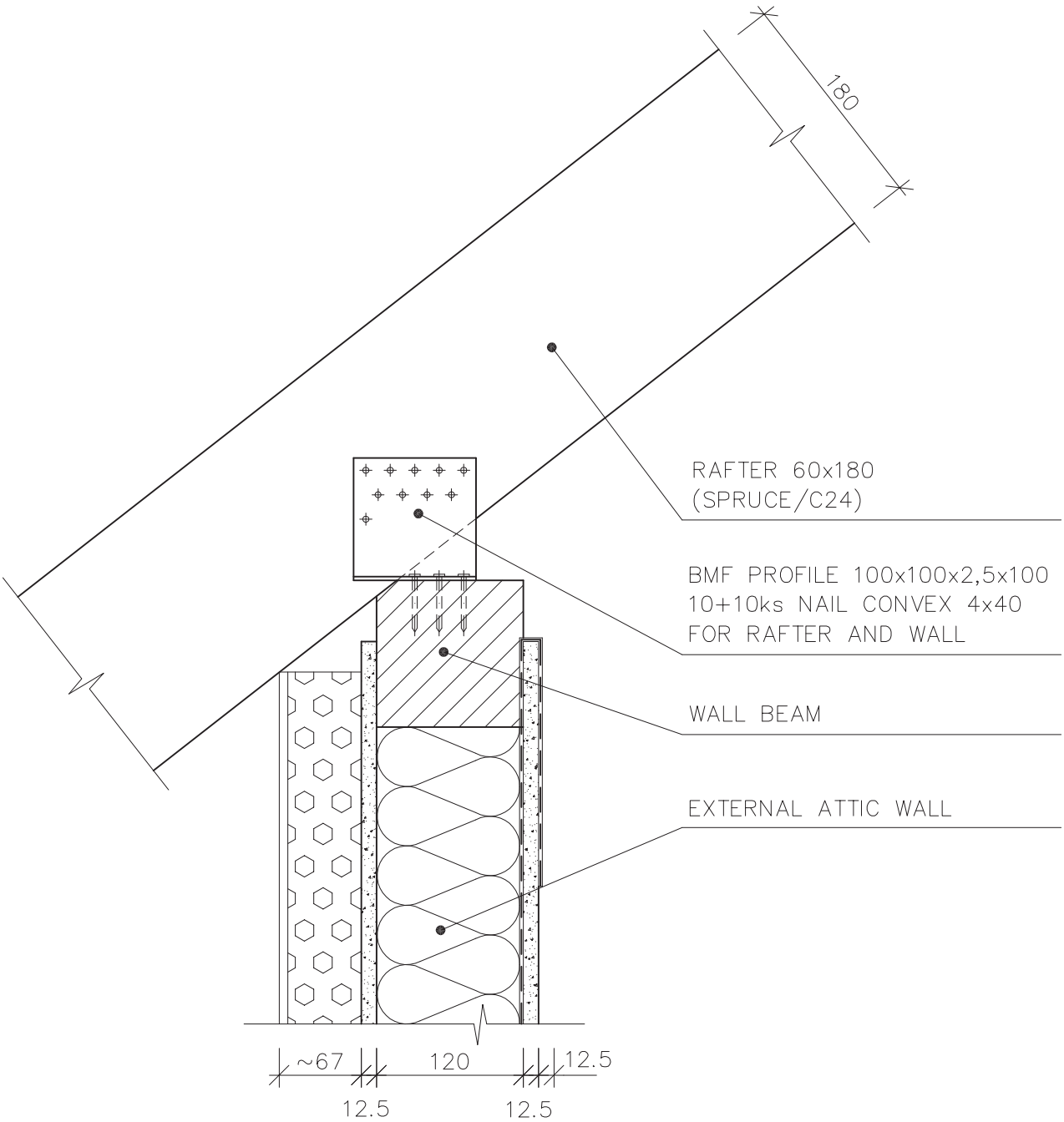

Scale applies to original 1:5	Remark: DETACHED HOUSE		Date				
	Worked out by:	Jánošík Tomáš	01/06	Alternation	Date	Signature	Index x x x x x
	Authorized by:						
RD RÝMAŘOV	Type: BINDING RAFTER ROOF						
	CONNECTION WALL BEAM WITH RAFTER				RD C 411		

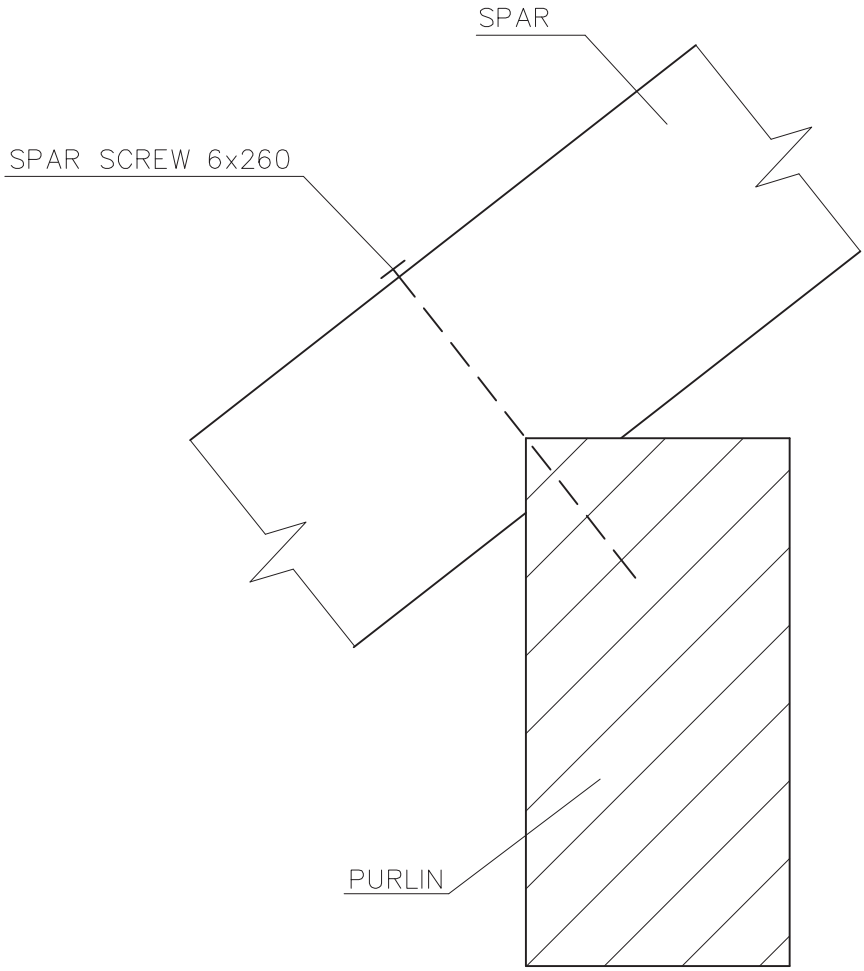

Scale applies to original 1:5	Remark: DETACHED HOUSE		Date				
	Worked out by:	Novotný Michal	01/06	Alternation	Date	Signature	Index x x x x x
	Authorized by:						
	Type: BINDING RAFTER ROOF						
RD RÝMAŘOV	JOINT PURLIN WITH SPAR				RD C 412		

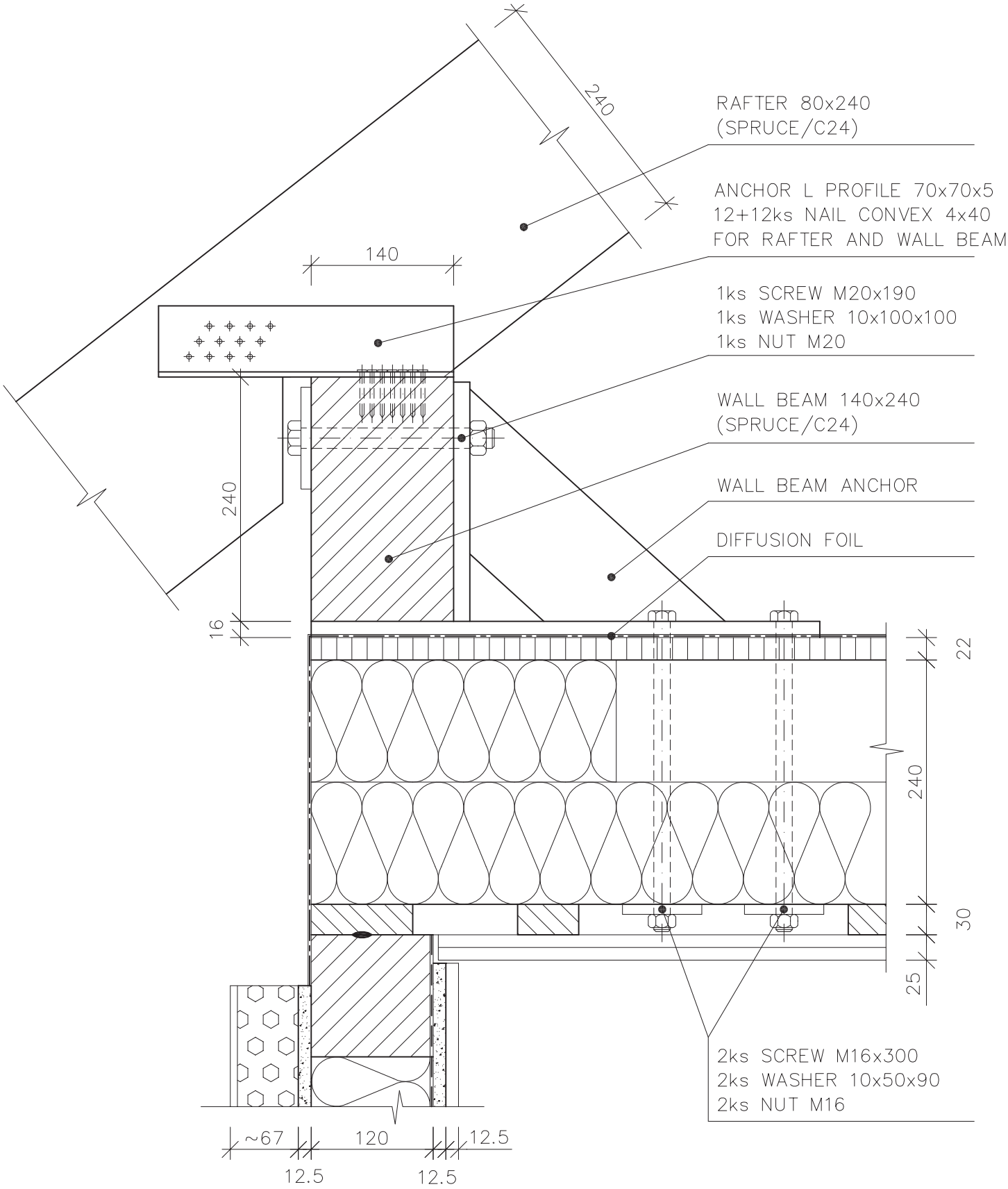

Scale applies to original 1:5	Remark: DETACHED HOUSE		Date				
	Worked out by:	Jánošík Tomáš	01/06	Alternation	Date	Signature	Index x x x x x
	Authorized by:						
RD RÝMAŘOV	Type: COLLAR BEAM ROOF						
	CONNECTION WALL BEAM WITH RAFTER						RD C 413

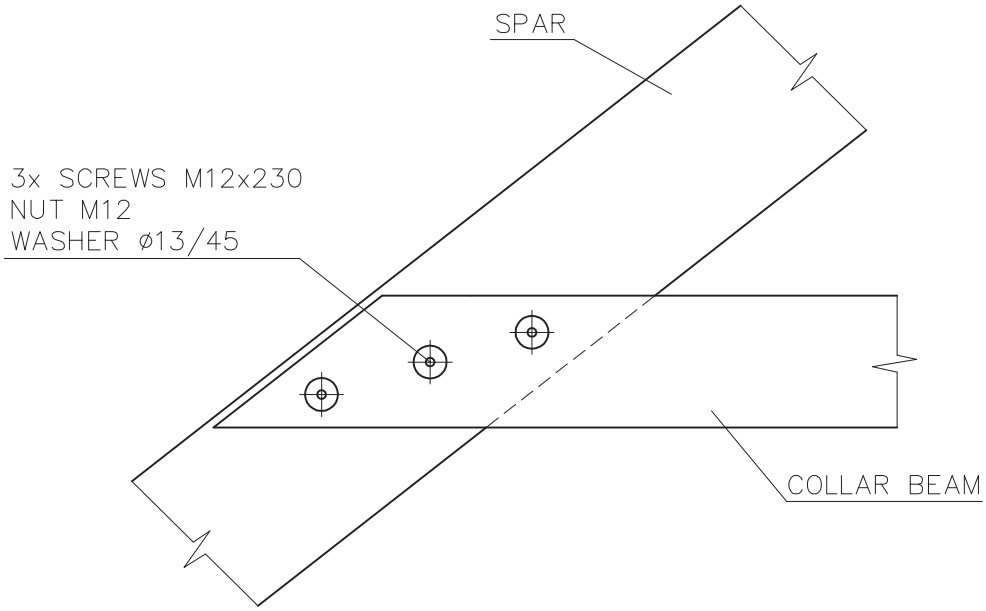

Scale applies to original 1:5	Remark: DETACHED HOUSE		Date				
	Worked out by:	Novotný Michal	01/06	Alternation	Date	Signature	Index x x x x x
	Authorized by:						
RD RÝMAŘOV	Type: COLLAR BEAM ROOF						
	JOINT COLLAR BEAM WITH SPAR				RD C 414		

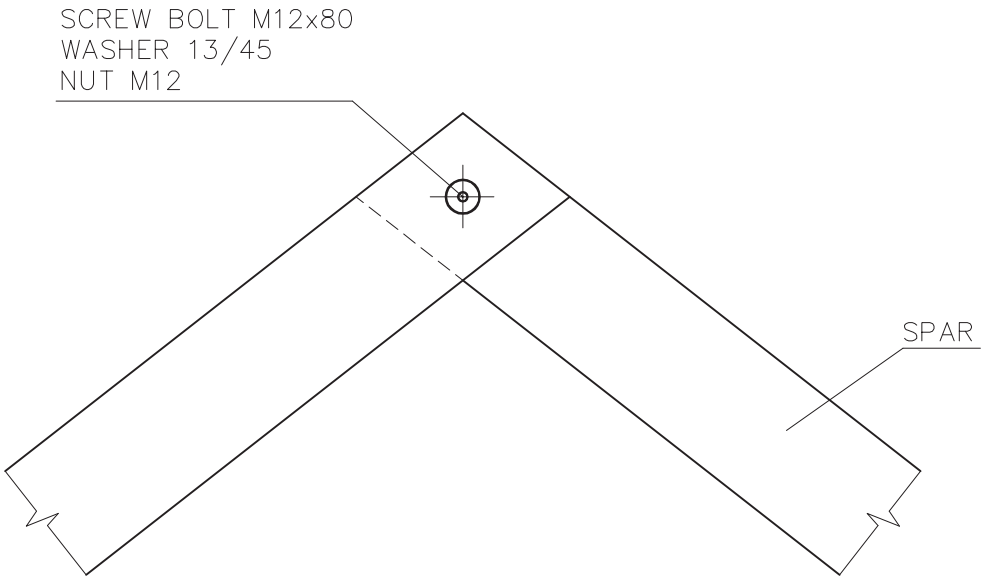

Scale applies to original 1:5	Remark: DETACHED HOUSE		Date				
	Worked out by:	Novotný Michal	01/06	Alternation	Date	Signature	Index x x x x x
	Authorized by:						
RD RÝMAŘOV	Type: RIDGE JOINT OF THE ROOF				RD C 415		

VIEW P

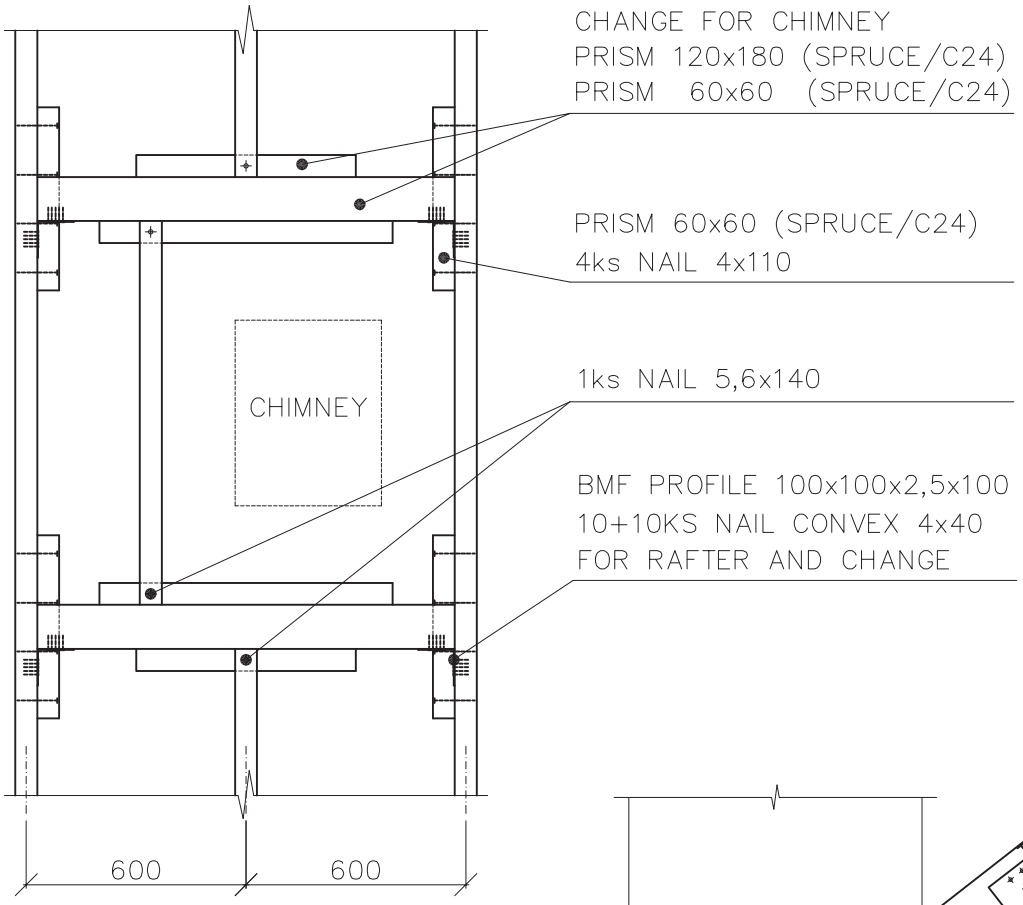

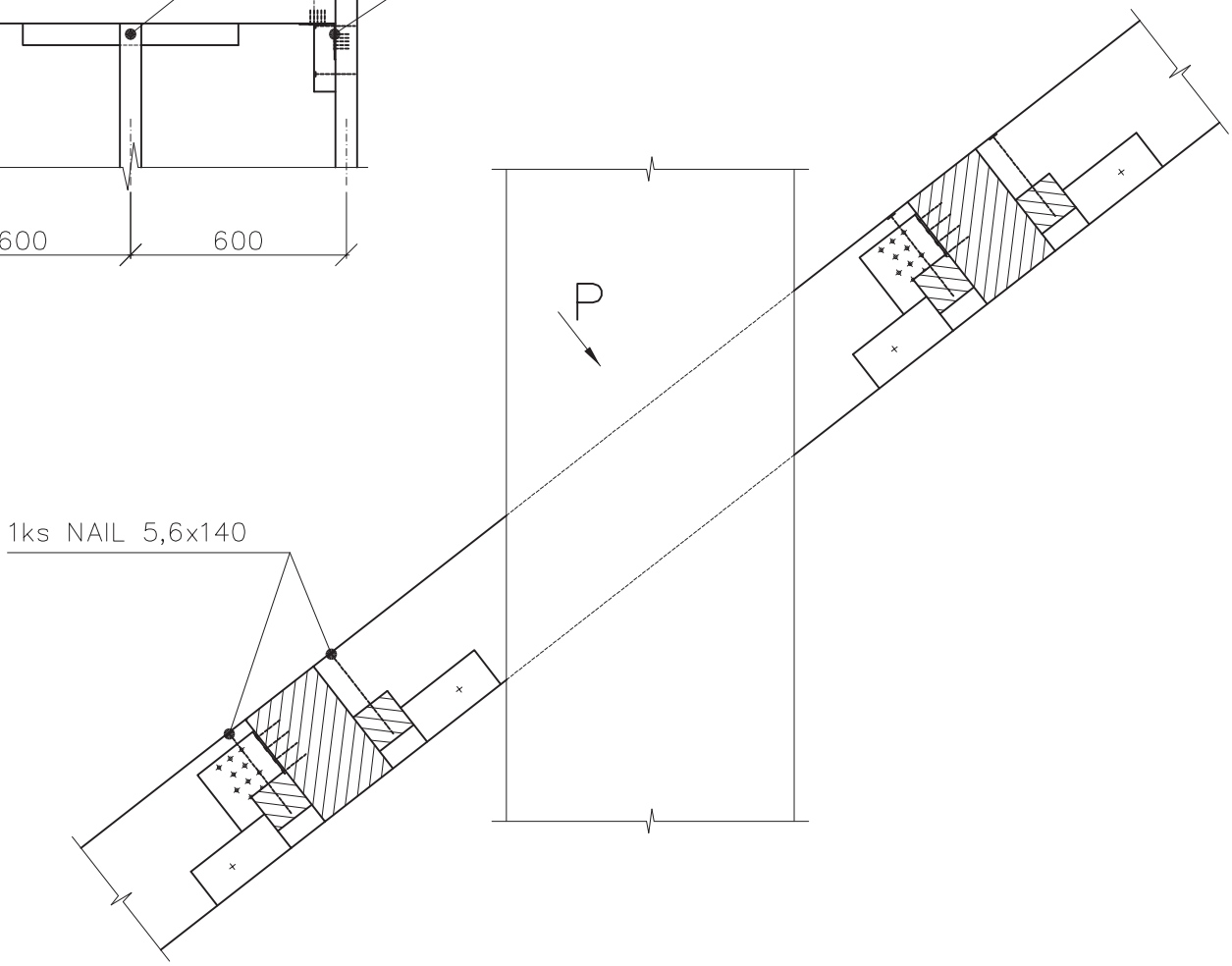

Scale applies to original 1:20 1:10	Remark: DETACHED HOUSE		Date				
	Worked out by:	Jánošík Tomáš	01/06	Alternation	Date	Signature	Index x x x x x
	Authorized by:						
RD RÝMAŘOV	Type: BINDING RAFTER ROOF						
	CHANGE FOR CHIMNEY IN THE ROOF						RD C 416

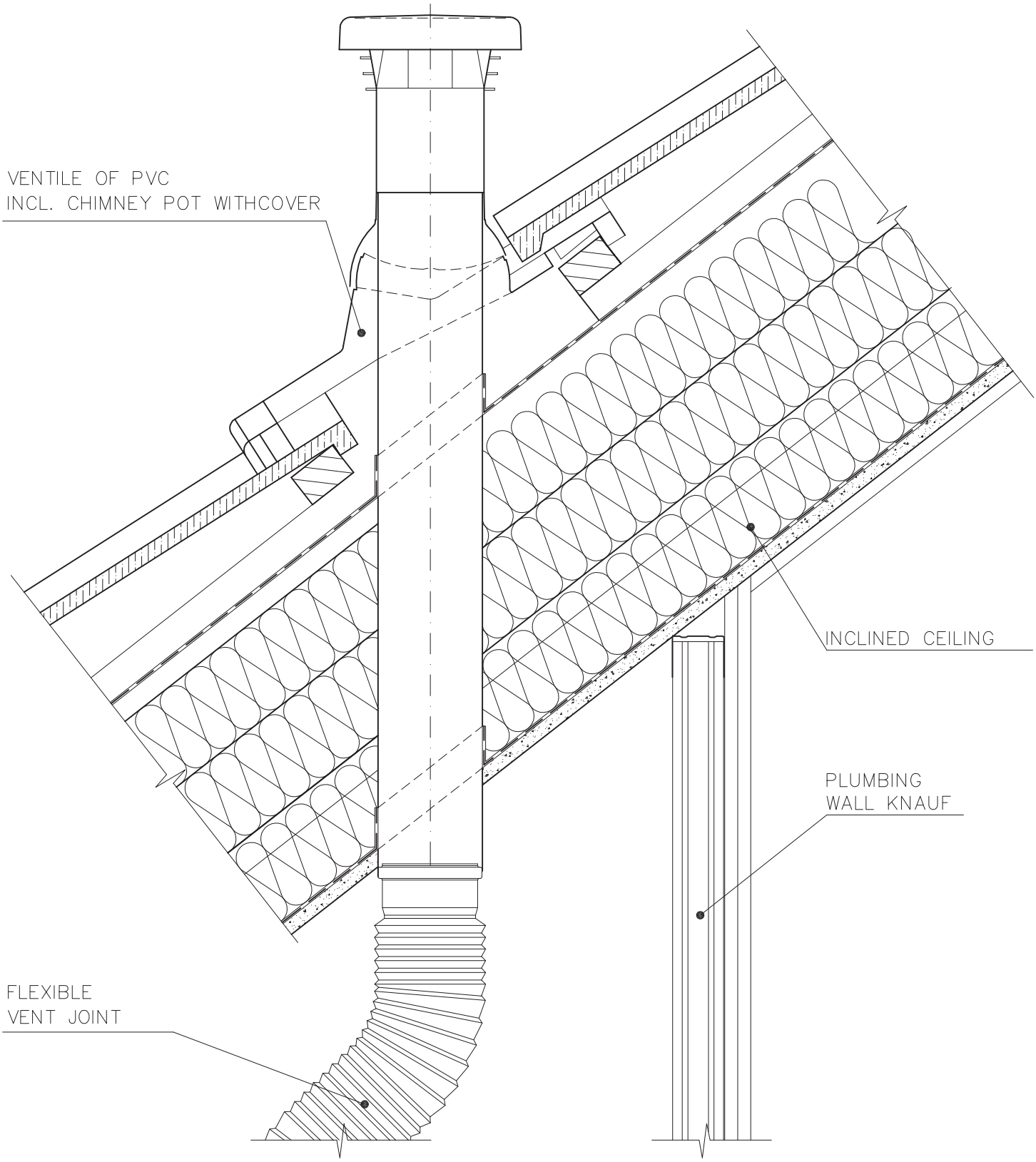

Scale applies to original 1:5	Remark: DETACHED HOUSE		Date				
	Worked out by:	Jánošík Tomáš	01/06	Alternation	Date	Signature	Index x x x x x
	Authorized by:						
RD RÝMAŘOV	Type: BINDING RAFTER ROOF						
	ROOF PASSAGE FOR CHIMNEY VENT				RD C 417		

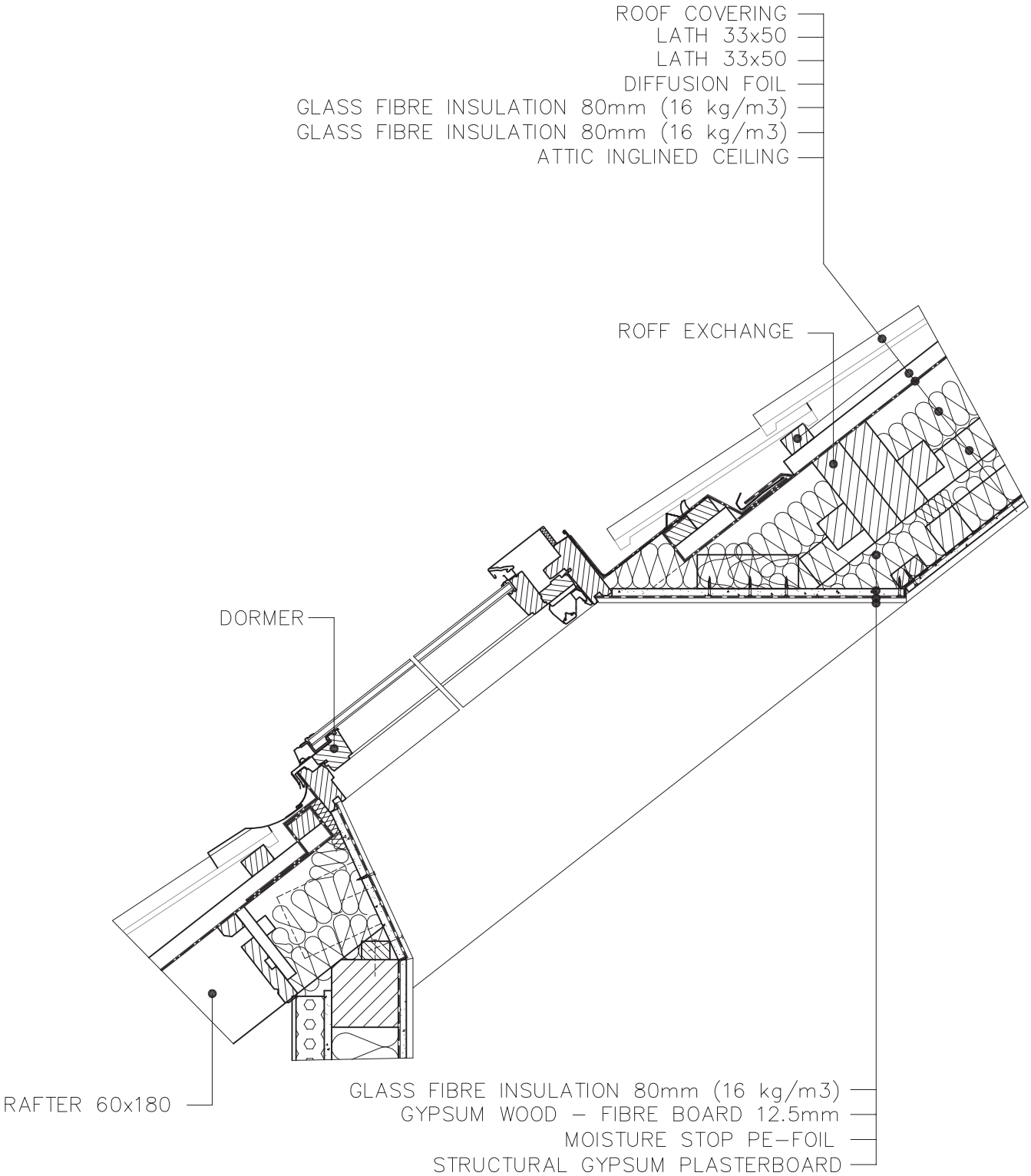

Scale applies to original 1:5	Remark: DETACHED HOUSE		Date				
	Worked out by:	HONIGSCHMIED MICHAL	01/06	Alternation	Date	Signature	Index
	Authorized by:						x x x x x
RD RÝMAŘOV	Type: VERTICAL SEKTION OF DORMER				RD C 418		

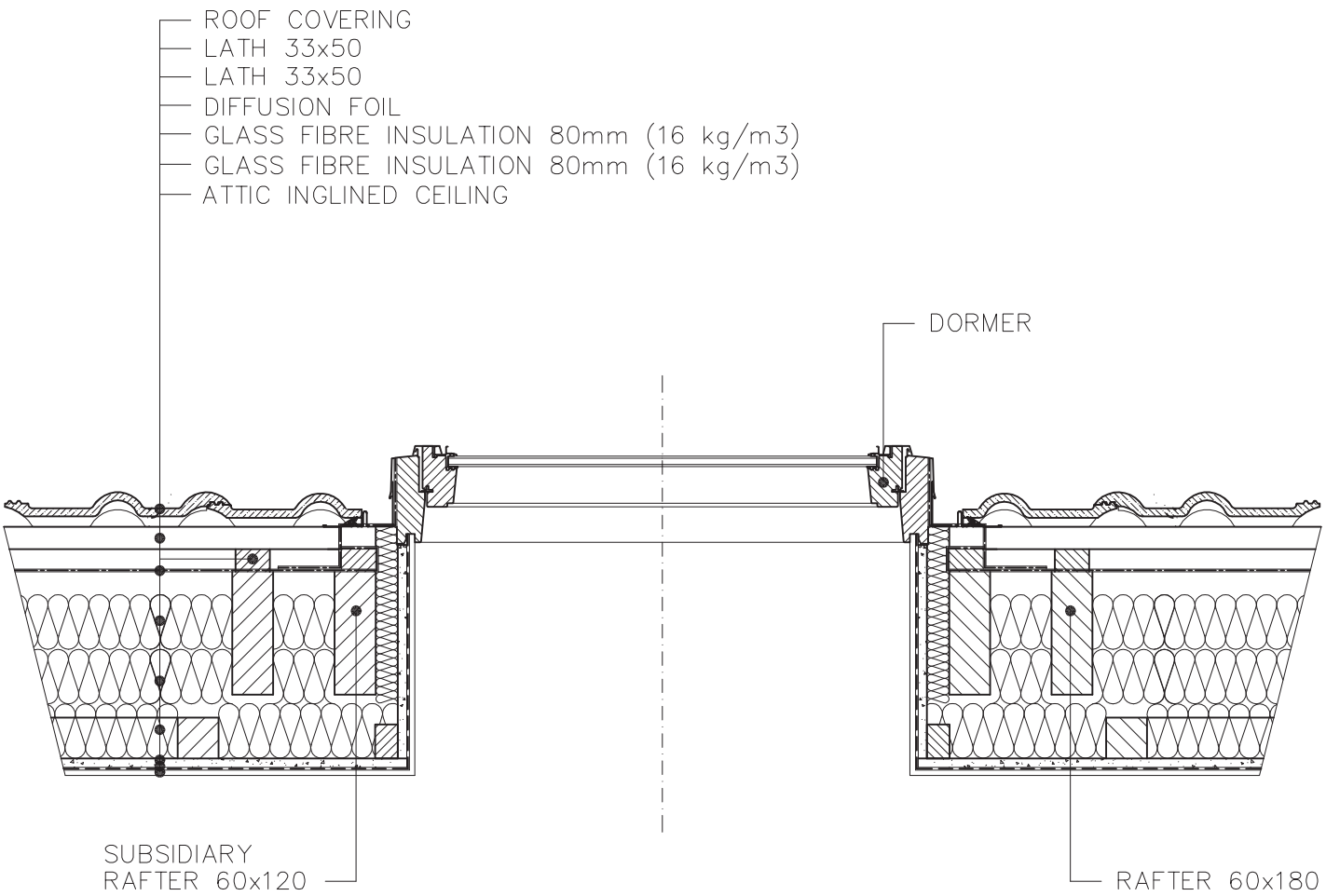

Scale applies to original 1:5	Remark: DETACHED HOUSE		Date				
	Worked out by:	HONIGSCHMIED MICHAL	01/06	Alternation	Date	Signature	Index x x x x x
	Authorized by:						
RD RÝMAŘOV	Type: HORIZONTAL SECTION OF DORMER				RD C 419		

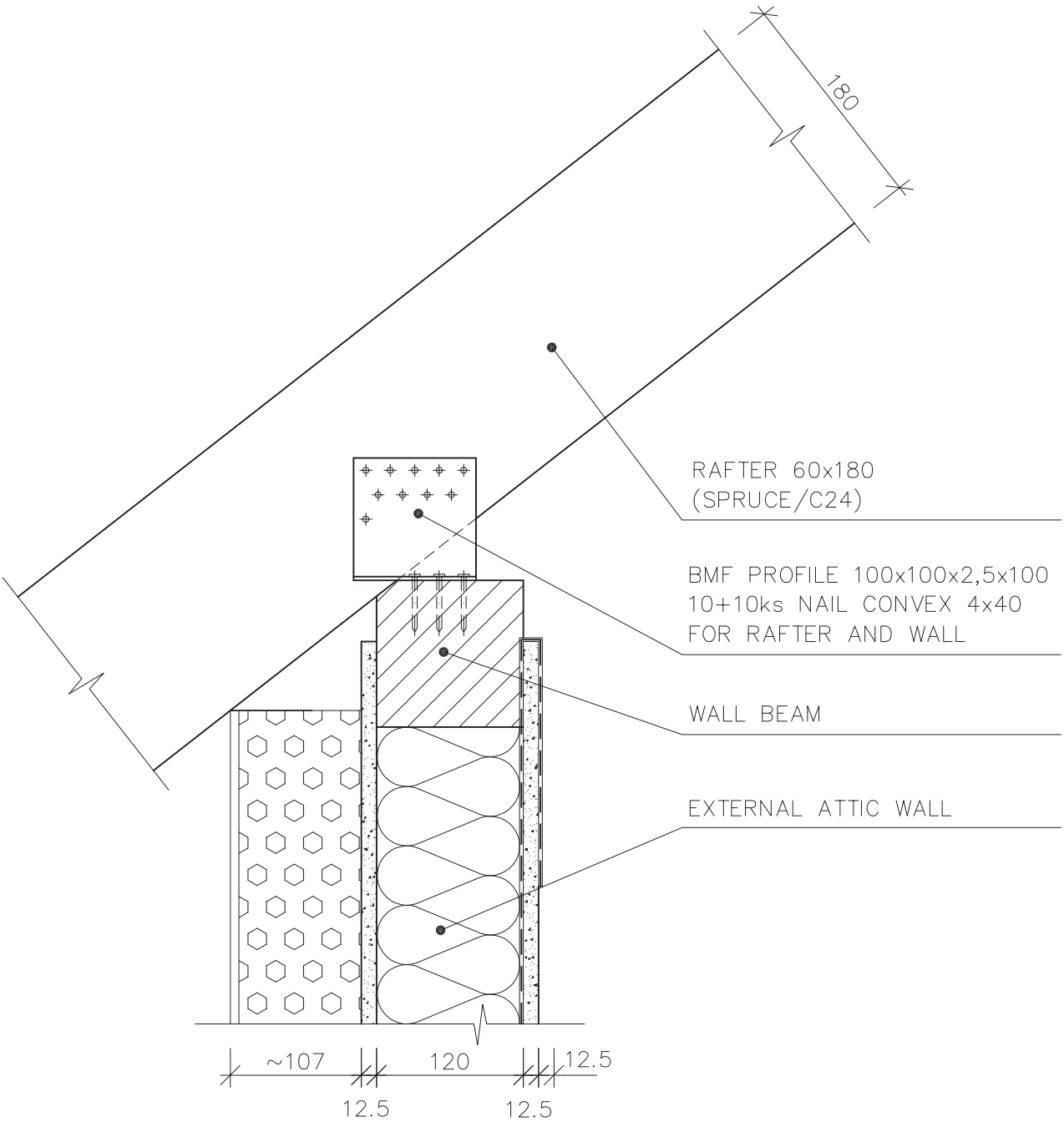

Scale applies to original 1:5	Remark: DETACHED HOUSE		Date				
	Worked out by:	Ing. Pavel Krupa	09/07	Alternation	Date	Signature	Index x
	Authorized by:	Tomáš Jánošík	09/07				x x x x
RD RÝMAŘOV	Type: BINDING RAFTER ROOF						
	CONNECTION WALL BEAM WITH RAFTER						RD C 420

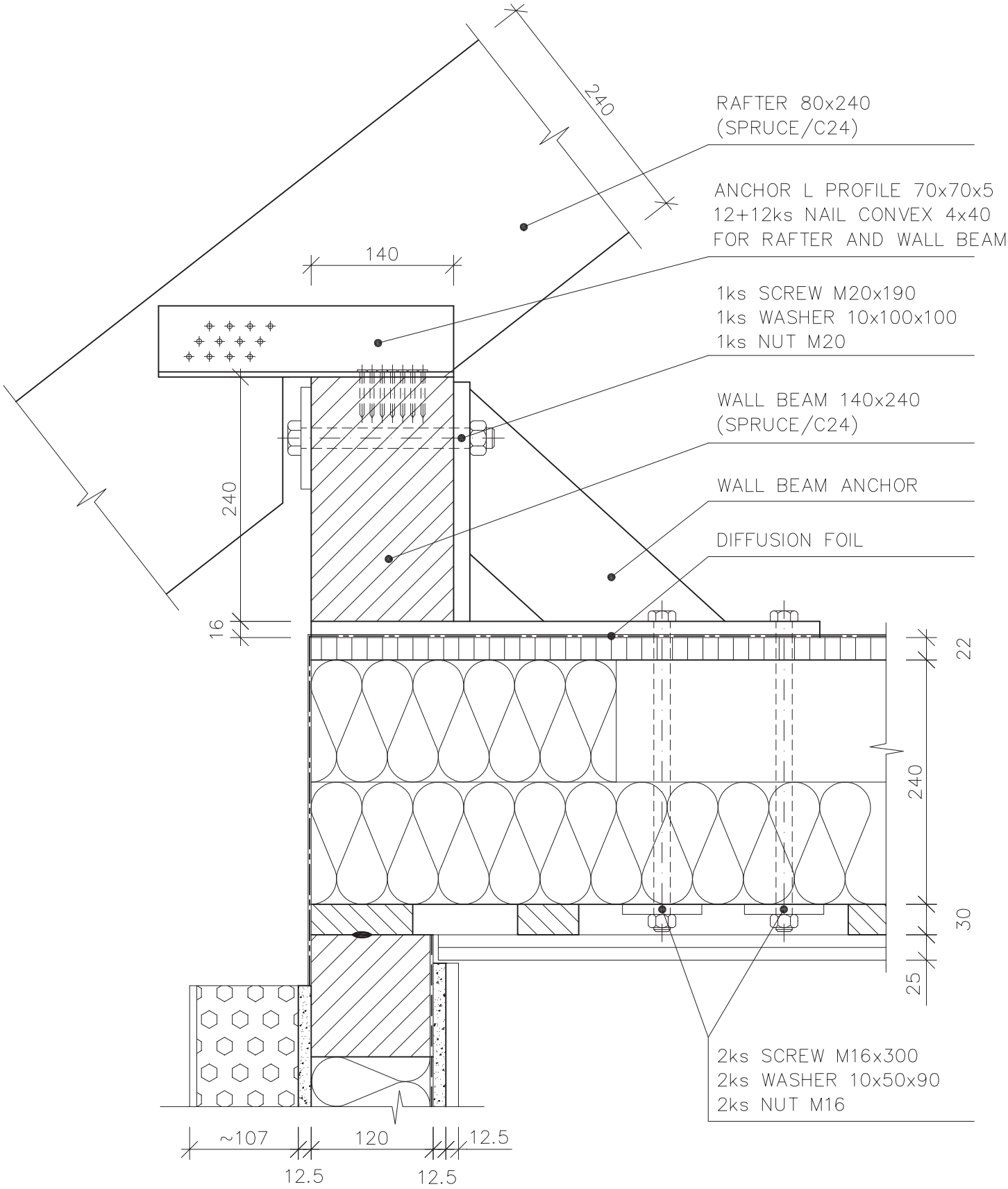

Scale applies to original 1:5	Remark: DETACHED HOUSE		Date				
	Worked out by:	Ing. Pavel Krupa	09/07	Alternation	Date	Signature	Index x
	Authorized by:	Tomáš Jánošík	09/07				x x x x

RD RÝMAŘOV

Type: COLLAR BEAM ROOF

CONNECTION WALL BEAM WITH RAFTER

RD C 421

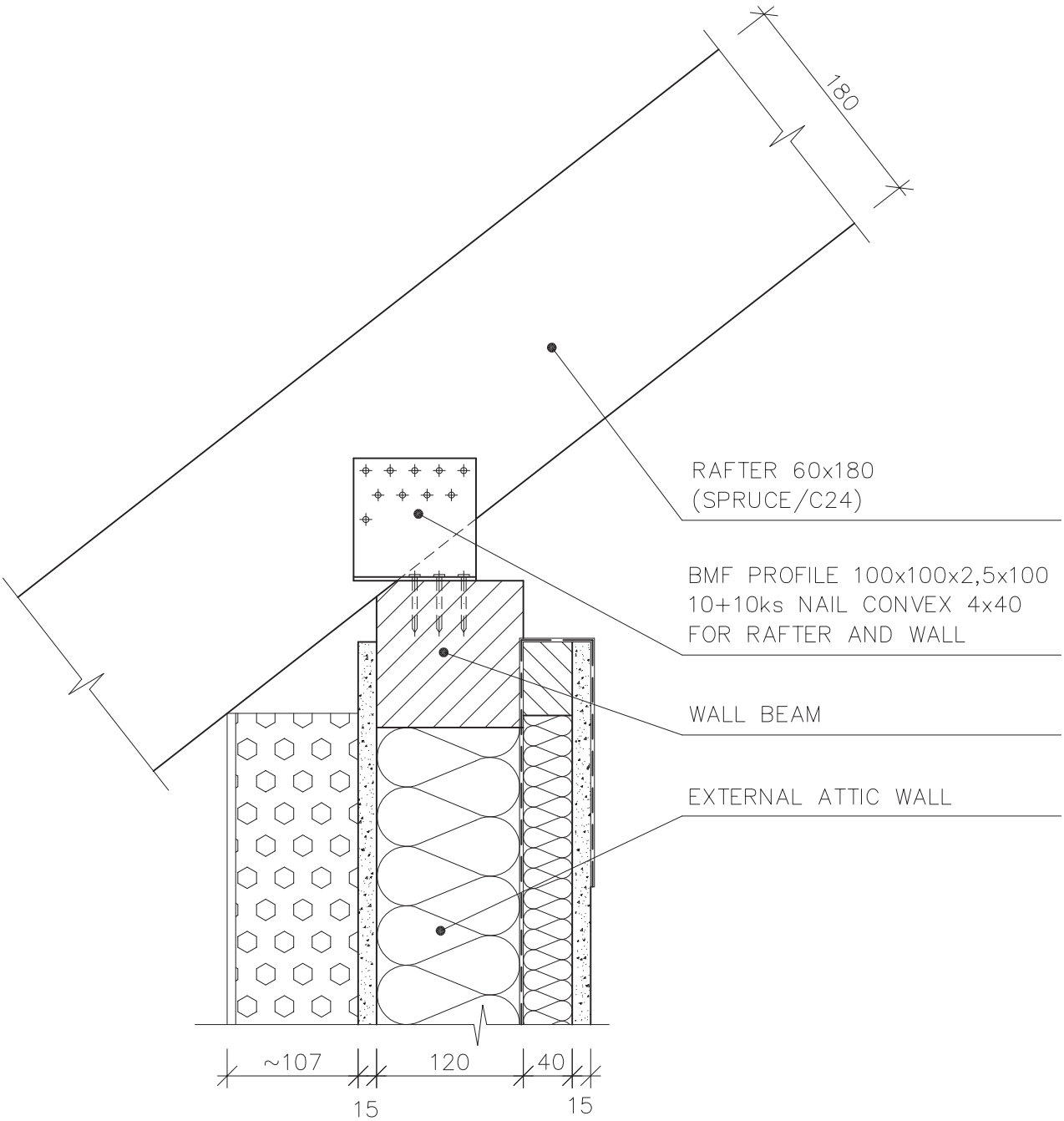

Scale applies to original 1:5	Remark: DETACHED HOUSE		Date				
	Worked out by:	Ing. Pavel Krupa	09/07	Alternation	Date	Signature	Index x
	Authorized by:	Tomáš Jánošík	09/07				x x x x
RD RÝMAŘOV	Type: BINDING RAFTER ROOF						
	CONNECTION WALL BEAM WITH RAFTER						RD C 422

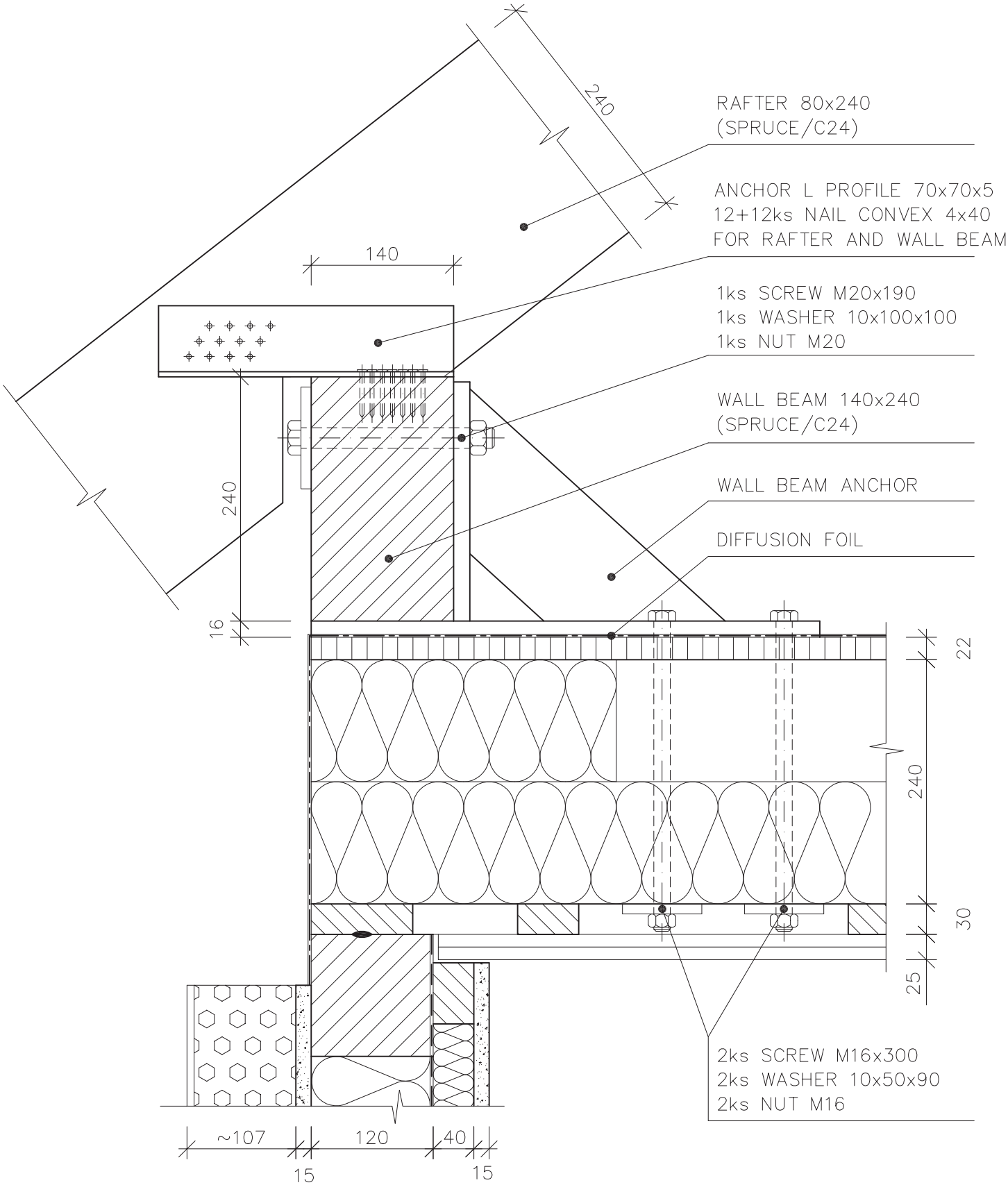

Scale applies to original 1:5	Remark: DETACHED HOUSE		Date				
	Worked out by:	Ing. Pavel Krupa	09/07	Alternation	Date	Signature	Index x x x x x
	Authorized by:	Tomáš Jánošík	09/07				
RD RÝMAŘOV	Type: COLLAR BEAM ROOF						
	CONNECTION WALL BEAM WITH RAFTER						RD C 423