Lorry Loader Lift Plan, Risk Assessment and Method Statement Conforms with LOLER 1998 and BS7121 Code of Practice for Safe Use of Cranes, Part 4:2010 Lorry Loaders **Contract Lift only – Hired & Managed RAMS must be by client.** **By definition, production of this MS-RA signifies a Contract Lift**	Job no.	134472
	Rev. no.	1
	Site location (town)	
	High Haldon	

Template document compiled by Steve Frazer-Brown, DWT H&S Director

1. Task (Brief description of procedure)

To install timber roof cassettes, lifting by lorry loader

2. Basic Information

Customer details	Customer	WellBuild Timber frame Ltd
	Site address	C/o Dutch Barn Conversion, Little Hookstea Farm, Off Hookstead, High Halden Kent, TN26 3NH
	Route to site info	M20, A228 Ashford Road. Hookstead
	Main contact	Marek Vaclavik
	Contact number	07751 679 476
	Date of task & duration (days)	10.5.21 tbc
Load Information	Quantity & Load	Roofing cassette's stacked
	Load weight inc. Lifting tackle	2000kg
Load complexity **1***	Load dimensions (L, W, H)	7.922m x 3.523m x 3.102m x 4 cassettes (three loads)
	Lifting points	Underslung – bearers required
	Max. radius of lift	18m
	Max. height of lift (top of boom)	Within radius
Site Conditions	Parked vehicles	None in lift area
	Access to lift area	To be suitably clear
	Rigid, drawbar or artic	Artic – short remote steer trailer only
	Width or height restrictions	Tight turn from road – gate must be 4 meters
	Ground conditions at lift area	Solid – semi cohesive
	Ground pressure capability	300KN/m²- Assumed
	Underground services	Yes – must not set up on or near
	Public interface	None – secure site
Environment complexity **1***	Overhead obstructions	Must not set up near
	Any other obstructions	Must not inhibit basic lift
	Other lifting operations	Must be none
	Site traffic	To be controlled by site
	Clear view/Blind lift	Must be clear
	Photos included below	Yes

*If load and environmental complexity are both 1 = Basic Lift, which may be performed under the generic sections of this document, with little further information required beyond this point.

3. Site/Client's Responsibilities

It is the client's/site's responsibility to ensure the following hazards have been controlled as far as is reasonably practicable BEFORE arrival of the David Watson Transport lorry

3.1 Any issues with the route to site, including but not limited to: bridge height restrictions, overhanging trees, width restrictions, narrow roads or any other concerns that may prevent access must be notified to DWT in advance;

3.2 Access into and out of site must be suitable for a lorry, lorry and drawbar trailer, or an articulated vehicle, unless agreed in advance. Removal or moving of parked cars outside of sites that prevent access or egress must be dealt with by site personnel;

3.3 The work area must be free from obstruction and have adequate hard-standing and of sufficient strength to withstand lorry loader stabilizer forces;

3.4 The work area must be free from underground services, overhead obstructions, excavations, manhole covers and backfilled areas. Note: DWT lorries will not drive or set up on grassy or muddy areas without suitable arrangements made for the foregoing requirements being met;

3.5 It is the site/client's responsibility to provide information on the ground bearing pressure capability. Without this information, DWT are only able to provide a stabiliser force and pad size based on a generic assumed capability of 300kN.

3.6 The set-down area when delivering must be of adequate strength to accommodate the load;

3.7 Unauthorised personnel, including the public, must be restricted from access to the lift area, with the provision of physical barriers if necessary;

3.8 Site to provide a qualified first-aider on site throughout the duration of the task;

3.9 If any of the foregoing is of concern, please advise DWT in advance. Depending on the concern, a chargeable site survey may be required. In not advising DWT in advance, any works aborted will be chargeable.

End – please see next page.

4. Lorry Loader details

Loader make/model	F820RA.2.26		F / R-mount	Front
Rated capacity at full radius	Weight	1420Kg	Full radius	25,80M
Rated capacity @ req. radius	Weight	2000Kg	Req. radius	18M
Required capacity @ req. radius	Weight	2000Kg	Req. radius	18M

4a. Duty Chart – insert for Site specific RAMS only (also available with vehicle)

Fleet number V88 – Midas AY66 SZW
82-tonne/metre behind cab tractor unit
Fassi F820RA.2.26 Serial No 8002-0076
Fly-jib attachment (giving 25.80m reach)
Various trailer options

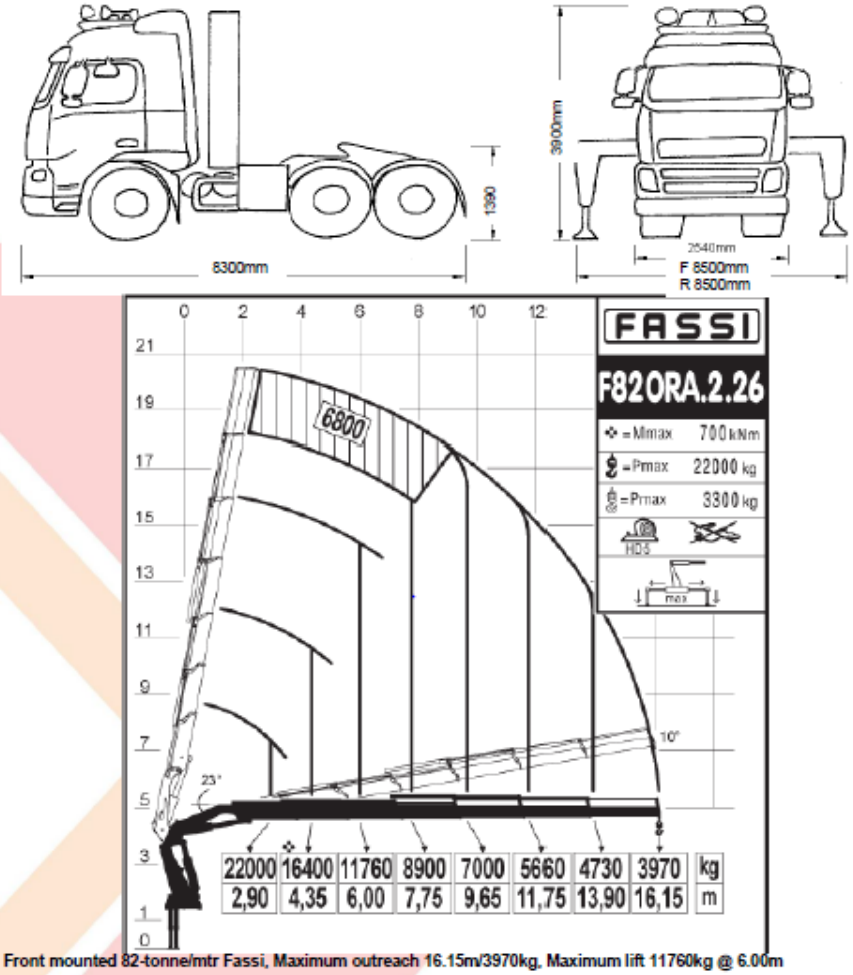

Front mounted 82-tonne/mtr Fassi, Maximum outreach 16.15m/3970kg, Maximum lift 11760kg @ 6.00m
Maximum outreach with Fly-jib 25.80m/1420kg
Main stabilizer span: 8490mm, Aux. stabilizer span 8500mmmm; Dist. F to R stabilizers: 4630mm
Stabilizer Max Reaction: 245.84kN (worst case scenario); Column offset: 320mm; Crane weight: 7250kg
Max. GVW 44000kg, Tractor unit Tare Weight 22440kg, various payloads depending on trailer (enquire at EC)
33' Extendable trailer, 40' trailer, all-steer extendable stepframe trailer. See below for fly-jib capabilities

Page 1 of 2

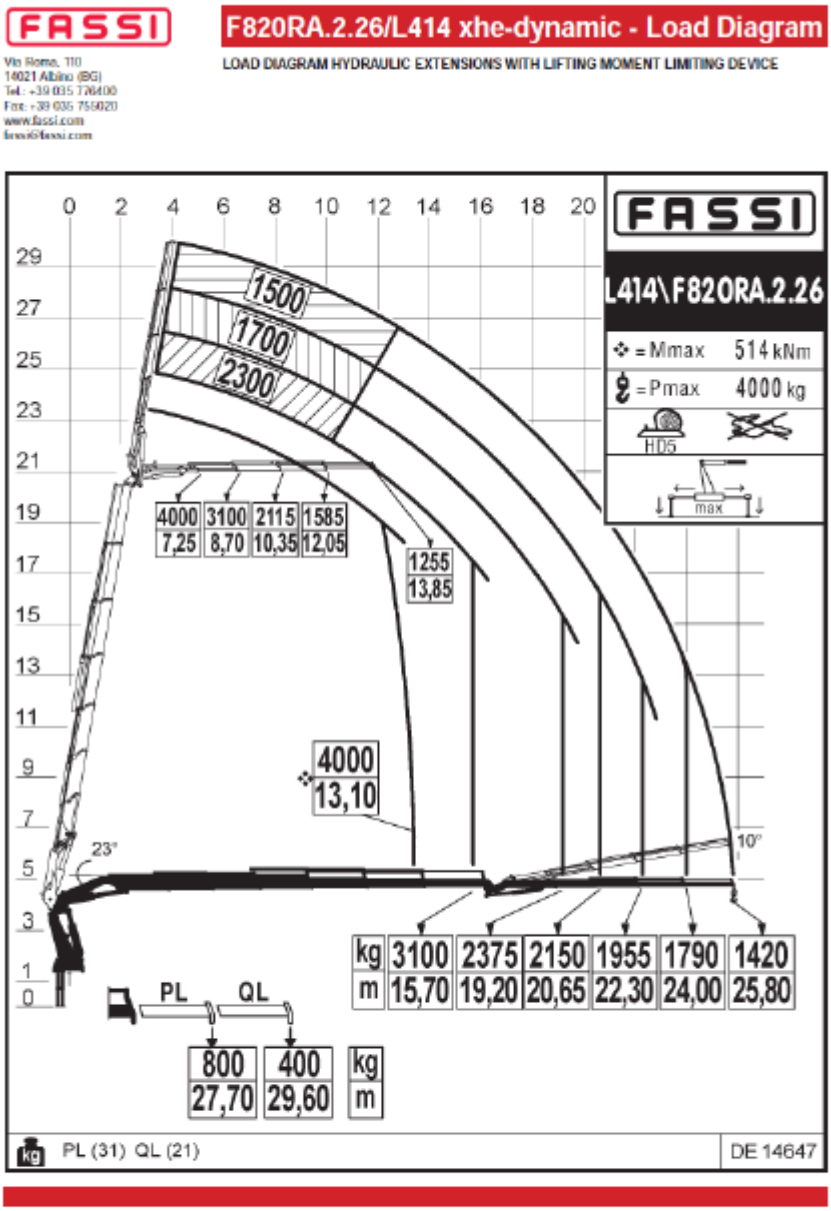

This is an example truck to be used – actual truck must have equivalent or greater reach

5. Risk Assessment (known risks)

Operation / Issue	Hazard	Risk	Control Measures to Eliminate or Minimise Risk	Residual Risk
General site working	• General site risks	High	• All DWT employees have been given basic site safety awareness; • Site may back up with induction	Med
People in Lift Area	Struck by: • Lorry • Lorry loader boom • Moving load	High	• Public to be excluded from site; • Effective exclusion zone required; • Remain clear of load during lift	Low
PPE	Struck by: • Falling items • Sharp objects • Moving site vehicles Impacting solid items	High	• Safety helmet to be worn with chinstrap to hold hat on if falling; • Safety footwear with steel midsoles; • Hi-vis clothing (site may make specific demands such as orange)	Low
Lorry loader stability	• Ground unable to support lorry loader	High	• Voids/underground services to be advised by Principal Contractor; • Principal Contractor to provide ground bearing capability information; • Stabilizer mat size to be assessed;	Low
	• Lorry loader overloaded	High	• Ensure weight of load is known; • Lorry loader not to lift beyond rated capacity; • Lorry loader operator trained and competent (ALLMI/CPCS card)	Nil
	• Lorry loader failure	Med	• Lorry loader adequately maintained and holds current Report of Thorough Examination	Low
Ladder Use	• Ladder may slip if used incorrectly or unsafely	High	• Pre-use inspection of ladder to ensure fit for purpose; • Must be tied off, stabilised or footed before ascending; • Must be of suitable length or an alternative hand-hold utilised; • Harness & inertia reel system to be utilised wherever practicable.	Low
Slinging of load	• Incorrect slinging; • Load may fall	High	• Trained and competent slinger; • Pre-use inspection of lifting accessories; • Lifting accessories to be suitable for task with adequate SWL and to hold current Report of Thorough Examination; • Lifting accessories to be protected from damage;	Low
Movement of load	• Load may collide with nearby structures • Load may collide with other cranes, excavators etc • Load/lorry loader comes within arcing distance of overhead lines;	Med Med Med	• Tag line may be necessary – operator to assess conditions; • Establish exclusion zone; • If present, power lines to be isolated or lorry loader to be positioned outside minimum safe approach distance – 9m for timber supports, 15m for steel (when fully extended),	

Movement of load (cont.)	• Crush/trapping risk from moving load • Inadvertent operation of lorry loader	Med	unless advised otherwise by power supply company competent persons; • Lifting team trained and competent; • No ingress under suspended load; • Lorry loader operator to remain stationary whilst operating lorry loader. Stop button must be activated whenever lorry loader is not being operated.	Low
Suspended load	• Load may fall	High	• Lorry loader to be adequately maintained and hold current Report of Thorough Examination; • Pre-use inspection of lorry loader. • Slinging by trained and competent slinger	Low
Work at Height	• Slinger may fall whilst attaching or detaching slings	High	• Work from ground if possible; • Handrail system to be utilised on load bed where fitted; • Where not possible, safety harness system to be utilised; • Rescue system to be established with site, which will be dependent upon site conditions	Low
Rescue system	• Operative falls from height whilst wearing safety harness; requires rescuing to prevent restriction of blood flow	Med	• If conscious, operative may be able to lower himself; • If 2nd operative is on site, should assist rescue; • Lifting team to be briefed on potential for rescue requirement; • Site owner/management has element of responsibility for safety of all personnel on site	Low
Lone working, day or night-time	• May suffer injury or be subject to violence	High	• To be avoided where practicable; • Assistance to be provided by client where practicable; • Call in upon commencing and completion of task; • Operatives judgement on safety and security to be supported.	Med
Environmental conditions	• High winds may cause load to swing or collide with fixed object • Other inclement weather	High	• Wind speed to be monitored by trained lorry loader operative, who may suspend lift; • Trained lorry loader operative to ensure lift is conducted safely • Lifting operation to be conducted close to ground wherever practicable	Low
Noise levels of operating lorry loader	• High levels of noise may impair hearing, either during operation or over time	Med	• Noise levels not generally high and will not have long-term impact. Operator has remote control and can move away from noise source during lifting operation.	Low
Vibration symptoms during use	• Hand-arm vibration or vibration white finger m\ay occur	Low	• Extremely unlikely as operator is not generally in contact with lorry or loader crane, using remote control to operate.	Nil

6. Wind conditions guidance

Beaufort Scale

Beaufort number	Description	Wind speed	Land conditions
0	Calm	< 0.3 m/s	Calm. Smoke rises vertically.
1	Light air	0.3–1.5 m/s	Smoke drift indicates wind direction. Leaves and wind vanes are stationary.
2	Light breeze	1.6–3.4 m/s	Wind felt on exposed skin. Leaves rustle. Wind vanes begin to move.
3	Gentle breeze	3.5–5.4 m/s	Leaves and small twigs constantly moving, light flags extended.
4	Moderate breeze	5.5–7.9 m/s	Dust and loose paper raised. Small branches begin to move.
5	Fresh breeze	8.0–10.7 m/s	Branches of a moderate size move. Small trees in leaf begin to sway.
6	Strong breeze	10.8–13.8 m/s	Large branches in motion. Whistling heard in overhead wires. Umbrella use becomes difficult. Empty plastic bins tip over.
7	High wind	13.9–17.1 m/s	Whole trees in motion. Effort needed to walk against the wind.
8	Gale	17.2–20.7 m/s	Some twigs broken from trees. Cars veer on road. Progress on foot is seriously impeded.
9	Strong gale	20.8–24.4 m/s	Some branches break off trees, and some small trees blow over. Construction/temporary signs and barricades blow over.
10	Storm	24.5–28.4 m/s	Trees are broken off or uprooted, saplings bent and deformed. Poorly attached asphalt shingles and shingles in poor condition peel off roofs.
11	Violent storm	28.5–32.6 m/s	Widespread damage to vegetation. Many roofing surfaces are damaged; asphalt tiles that have curled up and/or fractured due to age may break away completely.
12	Hurricane	≥ 32.8 m/s	Very widespread damage to vegetation. Some windows may break; mobile homes and poorly constructed sheds and barns are damaged. Debris and unsecured objects are hurled about

Consideration should always be given to any guidance provided by the lorry loader manufacturer. If in any doubt, a further qualified opinion should be sought.	Beaufort No.	**For general guidance purposes only**
	1 - 5	Generally acceptable conditions for lorry loader lifting operations
	6 - 8	Lifting in protected areas or at low level, or where the loads characteristics are such that the wind has little impact
	9 - 12	No lorry loader lifting to be carried out

7. **Site-specific risks (unknown risks).** These may be advised by site verbally, identified by lorry loader operator when on site, or as part of a site survey.

Operation / Issue	Hazard	Risk	Control Measures to Eliminate or Minimise Risk	Residual Risk
Other site risks, as advised by client	• Collision with gate at entrance with vehicle or load	High	• Gate must be minimum 4m to allow access of narrow lane, competent steersman required to assist vehicle through gate.	Low
	•		•	
	•		•	
Any issues that cannot easily be resolved will take the lift categorisation beyond a Basic Lift and therefore require the operator to contact their office or the signatory AP (See Section 11)				

8. **Lift Categorization**

Load Complexity	1
Environmental Complexity	1
Lift Category	B*

*B = Basic
*I = Intermediate (formerly Standard)
*C = Complex

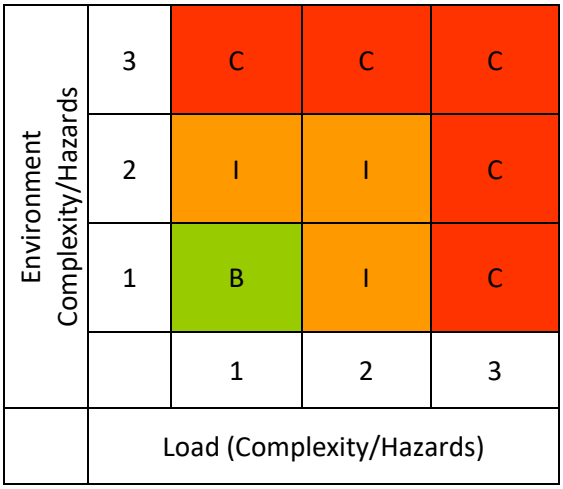

9. **Lifting Team**

Role	Name	Qualification	Contact Info
Appointed Person	S. Chester	ALLMI/CPCS	07812 286086
Lift Supervisor	Lorry Loader Operator	ALLMI/CPCS	
Lorry Loader Operator	TBA	ALLMI/CPCS	
Slinger/Signaller	Lorry drivers	ALLMI/CPCS	
All personnel involved in the lifting operation must have details of their qualifications with them.			

LOLER 1998 states that all lifting operations must be planned, supervised and carried out by competent people. This does not mean it is necessary for an Appointed Person to be present during all lifting operations. LOLER, and more specifically BS7121 (for lorry loaders, Part 4: 2010) clearly state that lifts that are conducted regularly by competent people and that have been pre-planned as part of a specialist lifting companies standard procedures may be carried out under generic documentation.

A Crane Co-ordinator is required where multiple lifting operations are being conducted and there is a risk of collision of lifting equipment and/or other site plant. If there is no risk of such an occurrence a Crane Co-ordinator is not required. Site must provide a Crane Co-ordinator and must liaise with the Appointed Person and Lift Supervisor with regard to the level of involvement necessary during the lifting operation.

BS7121, Code of Practice for the Safe Use of Cranes, Part 4: 2010 – Lorry Loaders, states that some roles in lifting operations by lorry loaders may be combined. It is feasible that, depending upon the complexity of the lifting operation, the lorry loader operator may also be the Lift Supervisor and the Slinger/Signaller. It should be possible for Basic Lifts and some low-level Intermediate Lifts to be carried out with the lorry loader operator fulfilling all these duties.

A separate Slinger/Signaller may be required where the Lorry Loader Operator is unable to combine roles through physical barriers such as obstructed access or vision. Sometimes this can be overcome by the use of a remote control unit to operate the lorry loader, which gives the Lorry Loader Operator scope to move away from the lorry to a position where the load, the lift area and the set-down points are clearly visible.

Responsibility for making the above decisions remains with the Appointed Person.

10. Lifting Equipment and Accessories and other equipment

Equipment	Item/Make	Specification & WLL	Report of Thorough Examination
Lorry Loader	F820RA.2.26	82tm	Current and with vehicle
Hoist (where req.)	NA	NA	NA
Lifting Accessories	Chain Slings	As required	Current and with vehicle
	Webbing Slings	As required	Current and with vehicle
	Webbing Slings	As required	Current and with vehicle
	Endless Slings	As required	Current and with vehicle
	Endless Slings	As required	Current and with vehicle
	Shackles	As required	Current and with vehicle
	Spreader beam	Not applicable	Current and with vehicle
Ensure the specific items to be used for the lift are pre-use inspected.			
Stabilizer mats	Timber or nylon	Not applicable	Not applicable
Ladder	Class 2 Light Industrial, 3 section extending		Not applicable
Tagline	Polypropylene rope		Not Applicable

11. Procedure

11.1 Standard Procedures

a.	Arrive on site and liaise with site contact, who briefs lifting team (site induction);
b.	Proceed to lifting area and ensure that method statement matches site conditions. Operator completes On-Site Risk Assessment;
c.	Lift supervisor (who may also be the lorry loader operator) to brief rest of lifting team, where present, on procedure to be followed;
d.	Site to establish exclusion zone around lifting area;
e.	Position lorry for lifting within radius of lifting capacity for weight of lift;
f.	Set-up lorry loader to manufacturer's instructions using stabilizer mats to spread load;
g.	Unstow lorry loader and perform 'dry run' to ensure sufficient reach and lifting capacity;
h.	Retract lorry loader and attach required lifting accessories;
i.	Extend lorry loader to centre of load;
j.	Where work at height is unavoidable, Operator/Slinger dons safety harness, pulls rope to extend inertia reel cable to ground level and attaches to safety harness;
k.	Ladder extended to side of load and is secured/stabilised/footed. No ladder is to be used without some means of stabilization utilised;
l.	Operator/Slinger accesses load and attaches lifting accessories.
m.	Operator/Slinger descends from load and prepares for lift, checks all personnel are clear of lift. Where required, tag line is attached;
n.	Load is lifted slightly (test lift) to ensure stability;
o.	When lorry loader operator is satisfied lift is stable, commence lifting;
p.	Place load at set-down point, which may require guidance for exact positioning;
q.	To detach slings, follow procedure h to l, detaching instead of attaching slings;
r.	Operator lifts lorry loader away from load and either continues with further lifts under same procedure or stows lifting accessories and lorry loader;
s.	When lifting operations are complete, lorry loader operator has paperwork signed off and leaves site;

11.2 Site-specific procedures

t.	Gate to be made wider to allow entry of wide loads;
u.	Each cassette to be pre slung for lifting;
v.	Site labour to fix cassettes into position and remove sling for the operator;
w.	Site material to be clear to allow level / solid lifting area;
x.	Operator to position for maximum lifting ad not to inhibit the rest of site.
y.	Competent steersman to assist vehicle through entrance.
z.	

12. Lift Plan

Sketch/photographs may be added but no additional information is required for Basic Lifts

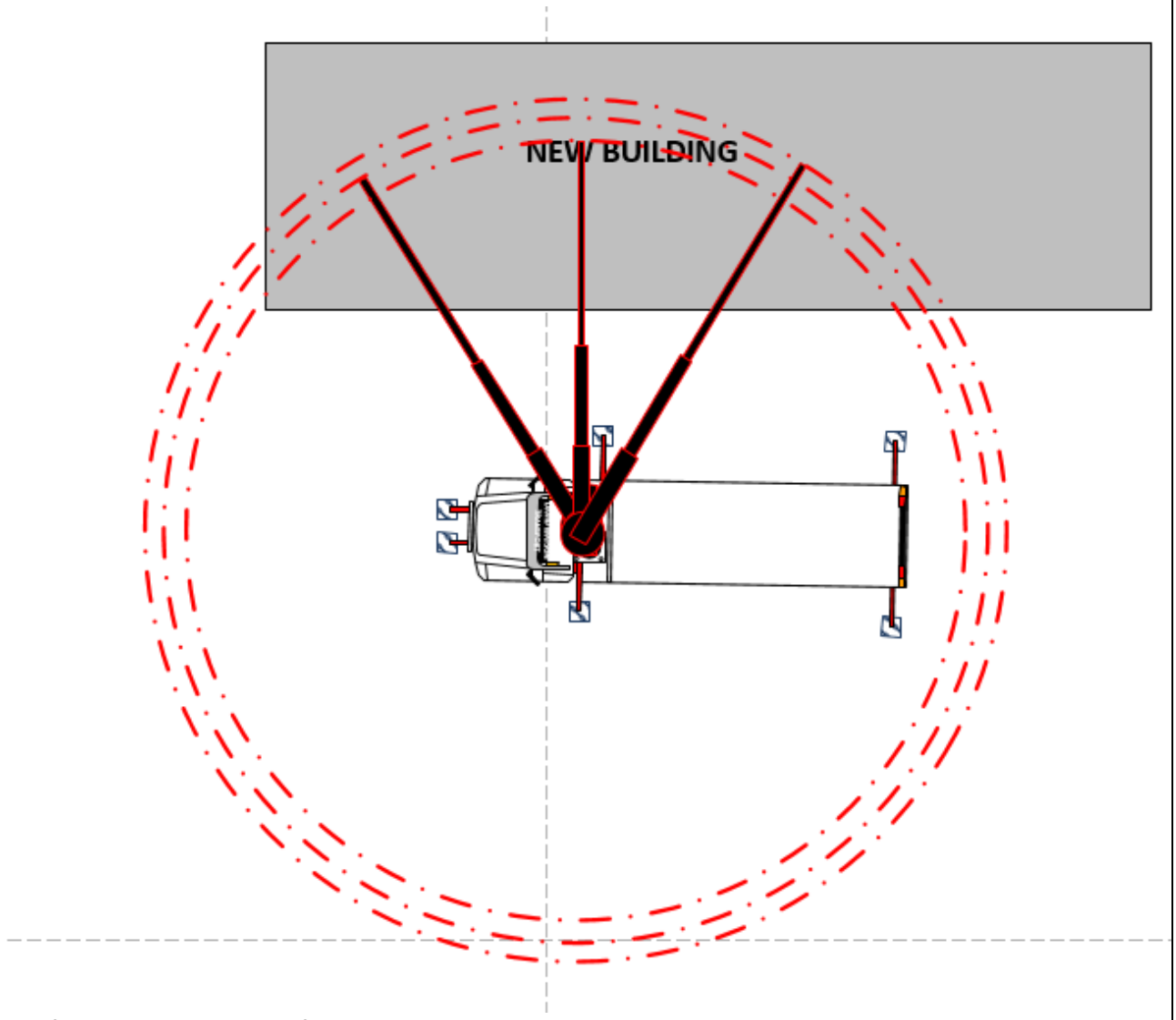

See following photographs for site layout and equipment to be loaded.

Hookstead
Hookstead
site

CLARUS
COMING SOON
LITTLE HOOKSTEAD
FARM
FOR FURTHER DETAILS PLEASE CALL

Gate to be widened to allow turn of narrow lane

Gate leading to site

New build – cassettes to be placed on roof – site to fix and remove slings
Building materials will be moved to allow for lorry loader to set up

13. Revision Status and Distribution of Method Statement

Issue date	1-4-21				
Revision No	One				
Distribution	Appointed Person (Author)		S. Chester		
	Appointed Person (Site)				
	Crane Co-ordinator (where app)				
	Site Representative				

14. Sign-off

Appointed Person for lifting company	I have prepared this Method Statement and authorise the Lifting Team to proceed with the lifting operation in compliance with this document. Any changes to the specified procedure must be approved by me before the lifting operation commences. *This person has full authority during Contract Lifts otherwise lift becomes Hired and Managed with all associated implications.	
Appointed Person for site For Contract Lifts the AP for site may sign only for acceptance purposes.	I am satisfied the Method Statement meets the requirements for the task to be carried out and that any changes in site conditions and/or procedures will be notified to the Appointed Person for the lifting company before lifting commences. I also confirm that the ground conditions are suitable for the lifting operation to be completed.	NA
Lift Supervisor (where required) For Basic Lifts this may be the lorry loader operator	I have been briefed on this Method Statement by the Appointed Person. I have checked that the lifting plan reflects the conditions on site and the details are correct. I have conducted a dynamic Risk assessment to ensure no additional risks exist. I have briefed the contents of this Method Statement to all other members of the lifting team.	Lorry loader operator
Lorry Loader Operator	Where I am not the Lift Supervisor, I have been briefed on and understand the contents of this Method Statement. Where I am the Lift Supervisor, I understand and accept the contents of this Method Statement, and I have briefed others involved in the lifting operation.	
Slinger/Signaller (where required)*	I have been briefed on and understand the contents of this Method Statement. *For Basic Lifts this may be the lorry loader operator	Lorry loader operator
Site representative	I confirm that I have been briefed on and understand the contents of this Method Statement. I also confirm that the ground conditions are suitable for the lifting operation to be completed.	

15. References

Lifting Operation and Lifting Equipment Regulations 1998

BS7121 Safe Use of Cranes, Part 1, 2 & Part 4:2010, Lorry Loaders

ALLMI/CPA Best Practice Guidance – Safe Use of Lorry Loaders